LAMPIRAN A
LIST PROGRAM PADA ARDUINO

```
long microsecondsToCentimeters(long microseconds)
{return microseconds / 29 / 2;
}
const int pingPin = 10;
const int pingPin1 = 12;
const int pingPin2 = A2;
const int pingPin3 = A1;
long duration,cm,duration1,cm1,duration2,cm2,duration3,cm3;
int c,s1,s2,s3,i;
volatile int x,k;
void mundur(){
digitalWrite(11,HIGH);
digitalWrite(4,LOW);
analogWrite(3,90);
}
void kiri(){
c = analogRead(A3);
Serial.println(c, DEC);
  if (c<650){
  digitalWrite(7,LOW);
  digitalWrite(8,HIGH);
  analogWrite(5,175);
  }
}
void kanan(){
c = analogRead(A3);
```



```
Serial.println(c, DEC);
```

```
if (c>150){
digitalWrite(7,HIGH);
digitalWrite(8,LOW);
analogWrite(5,185);
}
}void maju(){
digitalWrite(11,LOW);
digitalWrite(4,HIGH);
analogWrite(3,80);
}
void berhenti(){
digitalWrite(7,LOW);
digitalWrite(8,LOW);
analogWrite(5,0);
digitalWrite(11,LOW);
digitalWrite(4,LOW);
analogWrite(3,0);
}
void hitung(){
   for (k=0;k<1000;k++);
  x++;
  for (k=0;k<1000;k++);
}
void setup() {
s1=0;s2=1;s3=1;
```

```
 attachInterrupt(0,hitung,CHANGE);
 x=0;
 Serial.begin(9600);
}
void loop() {
for(i=0;i<=10;i++);
pinMode(pingPin, OUTPUT);
digitalWrite(pingPin, LOW);
delayMicroseconds(2);
digitalWrite(pingPin, HIGH);
delayMicroseconds(5);
digitalWrite(pingPin, LOW);
pinMode(pingPin, INPUT);
duration = pulseIn(pingPin, HIGH);
cm = microsecondsToCentimeters(duration);
Serial.print(cm);Serial.print("cm2");Serial.println();
pinMode(pingPin1, OUTPUT);
digitalWrite(pingPin1, LOW);
delayMicroseconds(2);
digitalWrite(pingPin1, HIGH);
delayMicroseconds(5);
digitalWrite(pingPin1, LOW);
pinMode(pingPin1, INPUT);
duration1 = pulseIn(pingPin1, HIGH);
cm1= microsecondsToCentimeters(duration1);
Serial.print(cm1);Serial.print("cm3");Serial.println();
```



```
pinMode(pingPin2, OUTPUT);
```

```
digitalWrite(pingPin2, LOW);
delayMicroseconds(2);
digitalWrite(pingPin2, HIGH);
delayMicroseconds(5);
digitalWrite(pingPin2, LOW);
pinMode(pingPin2, INPUT);
duration2 = pulseIn(pingPin2, HIGH);
cm2= microsecondsToCentimeters(duration2);
Serial.print(cm2);Serial.print("cm4");Serial.println();
pinMode(pingPin3, OUTPUT);
digitalWrite(pingPin3, LOW);
delayMicroseconds(2);
digitalWrite(pingPin3, HIGH);
delayMicroseconds(5);
digitalWrite(pingPin3, LOW);
pinMode(pingPin3, INPUT);
duration3 = pulseIn(pingPin3, HIGH);
cm3= microsecondsToCentimeters(duration3);
Serial.print(cm3);Serial.print("cm5");Serial.println();
if (s1==0){
if (cm<15){
 x=0;
digitalWrite(11,LOW);
digitalWrite(4,HIGH);
analogWrite(3,100);
```

```
delayMicroseconds(90);
}
else if (cm>15){
  digitalWrite(A0,HIGH);
 if (x<12){
  digitalWrite(11,LOW);
  digitalWrite(4,HIGH);
  analogWrite(3,120);
  delayMicroseconds(100);
 }
  else{
  digitalWrite(11,LOW);
  digitalWrite(4,LOW);
  analogWrite(3,0);
  digitalWrite(A0,LOW);
  delayMicroseconds(100);
  s1=1;s2=0;s3=1;
x=0;
}
}
}
if (s2==0){
  digitalWrite(A4,HIGH);
  if (x<4){
    digitalWrite(11,LOW);
    digitalWrite(4,HIGH);
```

```
    analogWrite(3,120);
    delayMicroseconds(100);
  }
  else {
    digitalWrite(11,LOW);
    digitalWrite(4,LOW);
    analogWrite(3,0);
    s1=1;s2=1;s3=0;
    digitalWrite(A4,LOW);
    delayMicroseconds(100);
  detachInterrupt;
}
}
if (s3==0){
digitalWrite(A5,HIGH);
if ((cm>3&&cm<5)&&(cm1>3&&cm1<5)&&cm2<20){
berhenti();
digitalWrite(A5,LOW);
while(1);}
if (cm2>25){
kiri();
if (c>650){
  digitalWrite(7,LOW);
  digitalWrite(8,LOW);
  analogWrite(5,0);
```

```
   digitalWrite(11,HIGH);
digitalWrite(4,LOW);
 analogWrite(3,85);
 }
}
if (cm2>12&&cm2<25){
kanan();
if (c<150){
 digitalWrite(7,LOW);
 digitalWrite(8,LOW);
 analogWrite(5,0);
 digitalWrite(11,HIGH);
 digitalWrite(4,LOW);
 analogWrite(3,91);}
 }
if (cm<5&&cm1>5&&cm3>4&&cm3<20&&cm2>5&&cm2<20){
kanan();
if (c<150){
digitalWrite(7,LOW);
digitalWrite(8,LOW);
analogWrite(5,0);
maju();
}
}
if (cm<3&&cm1<3&&cm3>10&&cm3<20&&cm2>10&&cm2<20){
kanan();
```

```
if (c<150){
digitalWrite(7,LOW);
digitalWrite(8,LOW);
analogWrite(5,0);
maju();
}
}
if (cm>5&&cm1<5&&cm3>13&&cm3<25&&cm2>2&&cm2<10){
kiri();
if (c>650){
digitalWrite(7,LOW);
digitalWrite(8,LOW);
analogWrite(5,0);
maju();
}
}
if (cm>5&&cm1>5&&cm3>3&&cm3<25&&cm2>2&&cm2<15){
kiri();
if (c>650){
digitalWrite(7,LOW);
digitalWrite(8,LOW);
analogWrite(5,0);
maju();
}
}
if (cm<5&&cm1>5&&cm2>5&&cm2<10&&cm3>3&&cm3<15){
```

```
kiri();
if (c>650){
digitalWrite(7,LOW);
digitalWrite(8,LOW);
analogWrite(5,0);
mundur();
}}
if (cm<3&&cm1<3&&cm2>8&&cm2<25&&cm3>3&&cm3<15){
mundur();
}
if (cm>5&&cm1<5&&cm3>3&&cm3<10&&cm2>10&&cm2<25){
kanan();
if (c<150){
digitalWrite(7,LOW);
digitalWrite(8,LOW);
analogWrite(5,0);
mundur();
}}
if (cm>5&&cm1>5&&cm3>3&&cm3<15&&cm2>10&&cm2<25){
kiri();
if (c>650){
digitalWrite(7,LOW);
digitalWrite(8,LOW);
analogWrite(5,0);
mundur();
}}}}
```

LAMPIRAN B

L298

DUAL FULL-BRIDGE DRIVER

- OPERATING SUPPLY VOLTAGE UP TO 46 V
- TOTAL DC CURRENT UP TO 4 A
- LOW SATURATION VOLTAGE
- OVERTEMPERATURE PROTECTION
- LOGICAL "0" INPUT VOLTAGE UP TO 1.5 V (HIGH NOISE IMMUNITY)

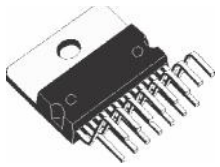

Multiwatt15

PowerSO20

ORDERING NUMBERS : L298N (Multiwatt Vert.)
L298HN (Multiwatt Horiz.)
L298P (PowerSO20)

DESCRIPTION

The L298 is an integrated monolithic circuit in a 15-lead Multiwatt and PowerSO20 packages. It is a high voltage, high current dual full-bridge driver designed to accept standard TTL logic levels and drive inductive loads such as relays, solenoids, DC and stepping motors. Two enable inputs are provided to enable or disable the device independently of the input signals. The emitters of the lower transistors of each bridge are connected together and the corresponding external terminal can be used for the connection of an external sensing resistor. An additional supply input is provided so that the logic works at a lower voltage.

BLOCK DIAGRAM

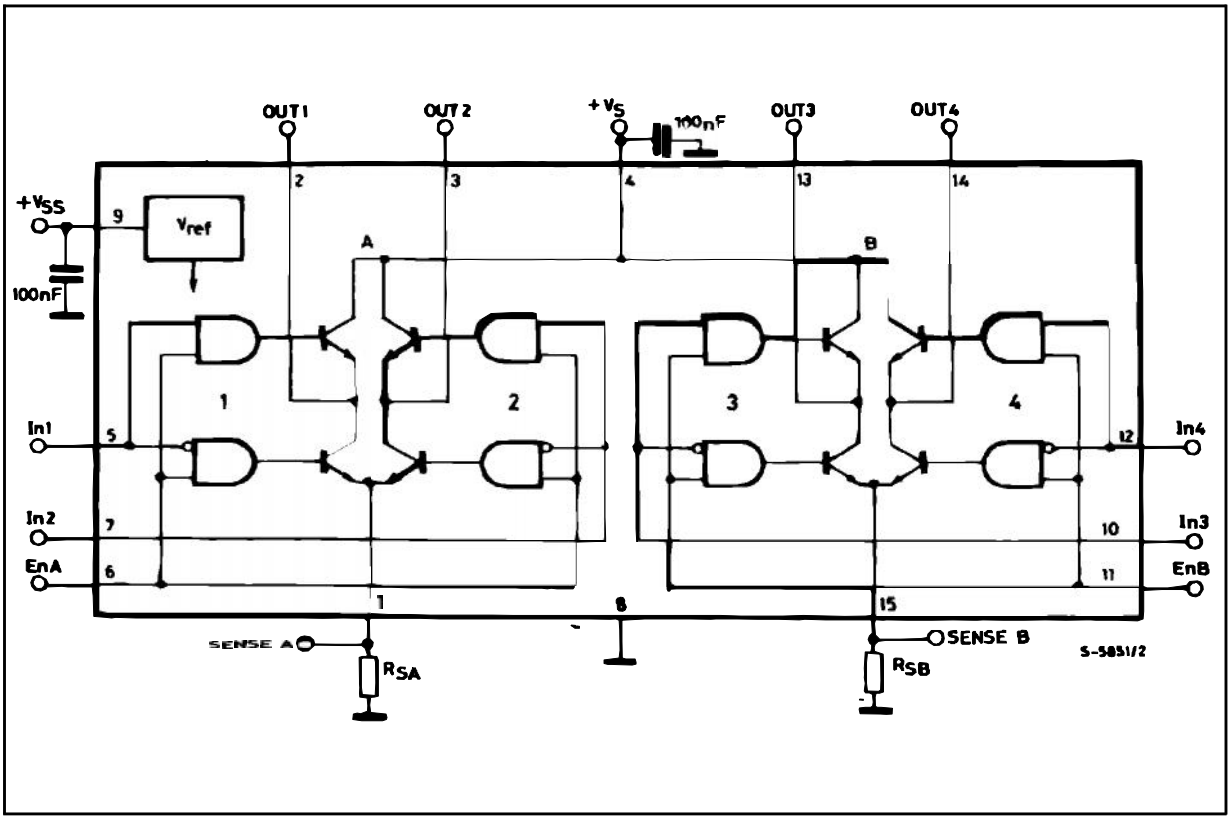

ABSOLUTE MAXIMUM RATINGS

Symbol	Parameter	Value	Unit
V_S	Power Supply	50	V
V_{SS}	Logic Supply Voltage	7	V
V_I,V_{en}	Input and Enable Voltage	–0.3 to 7	V
I_O	Peak Output Current (each Channel) – Non Repetitive (t = 100 s) –Repetitive (80% on –20% off; t_{on} = 10ms) –DC Operation	 3 2.5 2	 A A A
V_{sens}	Sensing Voltage	–1 to 2.3	V
P_{tot}	Total Power Dissipation (T_{case} = 75 C)	25	W
T_{op}	Junction Operating Temperature	–25 to 130	C
T_{stg}, T_j	Storage and Junction Temperature	–40 to 150	C

PIN CONNECTIONS (top view)

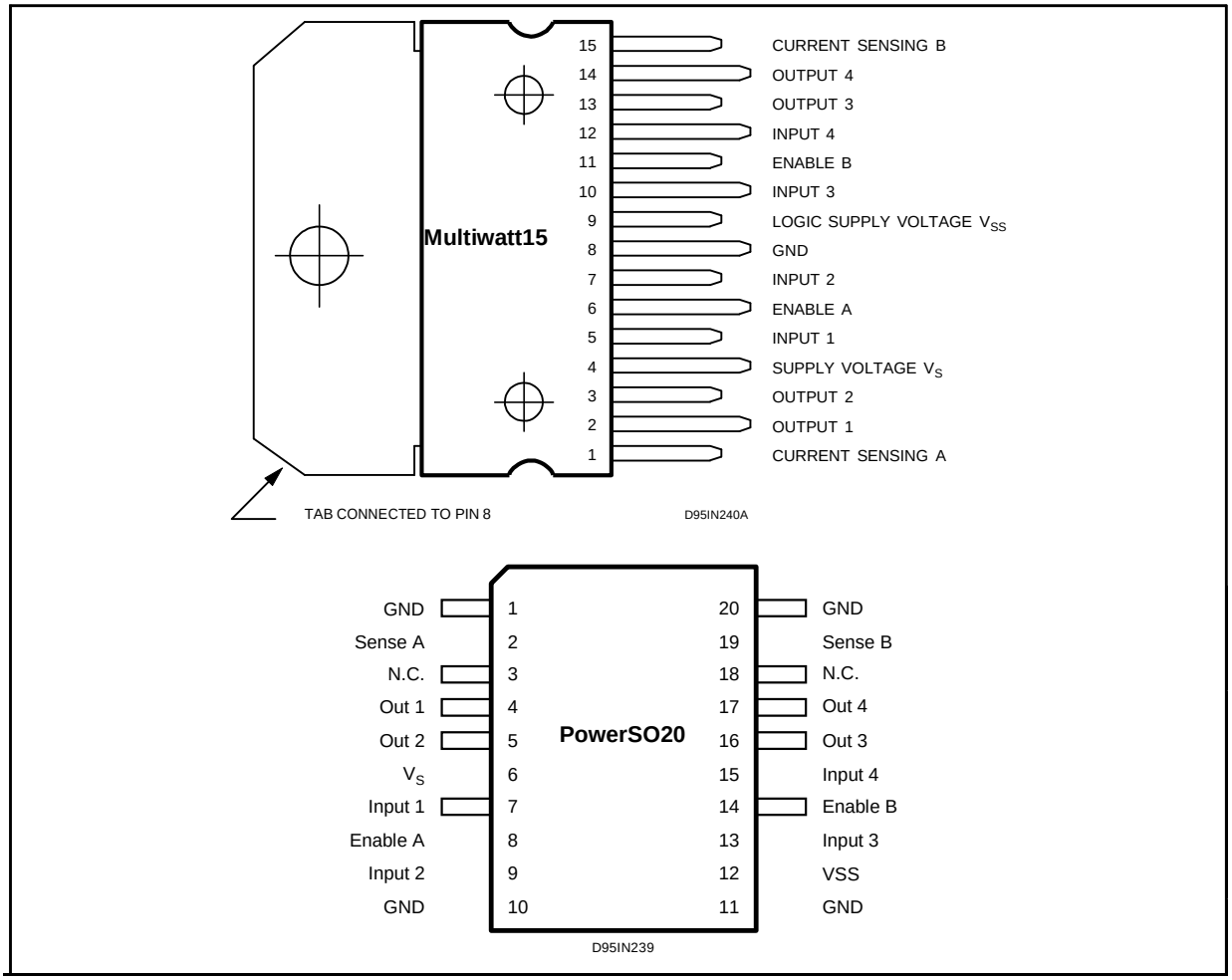

THERMAL DATA

Symbol	Parameter		PowerSO20	Multiwatt15	Unit
$R_{th\ j\text{-}case}$	Thermal Resistance Junction-case	Max.	–	3	C/W
$R_{th\ j\text{-}amb}$	Thermal Resistance Junction-ambient	Max.	13 (*)	35	C/W

(*) Mounted on aluminum substrate

PIN FUNCTIONS (refer to the block diagram)

MW.15	PowerSO	Name	Function
1;15	2;19	Sense A; Sense B	Between this pin and ground is connected the sense resistor to control the current of the load.
2;3	4;5	Out 1; Out 2	Outputs of the Bridge A; the current that flows through the load connected between these two pins is monitored at pin 1.
4	6	V_S	Supply Voltage for the Power Output Stages. A non-inductive 100nF capacitor must be connected between this pin and ground.
5;7	7;9	Input 1; Input 2	TTL Compatible Inputs of the Bridge A.
6;11	8;14	Enable A; Enable B	TTL Compatible Enable Input: the L state disables the bridge A (enable A) and/or the bridge B (enable B).
8	1,10,11,20	GND	Ground.
9	12	VSS	Supply Voltage for the Logic Blocks. A100nF capacitor must be connected between this pin and ground.
10; 12	13;15	Input 3; Input 4	TTL Compatible Inputs of the Bridge B.
13; 14	16;17	Out 3; Out 4	Outputs of the Bridge B. The current that flows through the load connected between these two pins is monitored at pin 15.
–	3;18	N.C.	Not Connected

ELECTRICAL CHARACTERISTICS (V_S = 42V; V_{SS} = 5V, T_j = 25 C; unless otherwise specified)

Symbol	Parameter	Test Conditions	Min.	Typ.	Max.	Unit
V_S	Supply Voltage (pin 4)	Operative Condition	V_{IH} +2.5		46	V
V_{SS}	Logic Supply Voltage (pin 9)		4.5	5	7	V
I_S	Quiescent Supply Current (pin 4)	V_{en} = H; I_L = 0 V_i = L V_i = H		13 50	22 70	mA mA
		V_{en} = L V_i = X			4	mA
I_{SS}	Quiescent Current from V_{SS} (pin 9)	V_{en} = H; I_L = 0 V_i = L V_i = H		24 7	36 12	mA mA
		V_{en} = L V_i = X			6	mA
V_{iL}	Input Low Voltage (pins 5, 7, 10, 12)		–0.3		1.5	V
V_{iH}	Input High Voltage (pins 5, 7, 10, 12)		2.3		VSS	V
I_{iL}	Low Voltage Input Current (pins 5, 7, 10, 12)	V_i = L			–10	A
I_{iH}	High Voltage Input Current (pins 5, 7, 10, 12)	Vi = H V_{SS} –0.6V		30	100	A
V_{en} = L	Enable Low Voltage (pins 6, 11)		–0.3		1.5	V
V_{en} = H	Enable High Voltage (pins 6, 11)		2.3		V_{SS}	V
I_{en} = L	Low Voltage Enable Current (pins 6, 11)	V_{en} = L			–10	A
I_{en} = H	High Voltage Enable Current (pins 6, 11)	V_{en} = H V_{SS} –0.6V		30	100	A
$V_{CEsat\ (H)}$	Source Saturation Voltage	I_L = 1A I_L = 2A	0.95	1.35 2	1.7 2.7	V V
$V_{CEsat\ (L)}$	Sink Saturation Voltage	I_L = 1A (5) I_L = 2A (5)	0.85	1.2 1.7	1.6 2.3	V V
V_{CEsat}	Total Drop	I_L = 1A (5) I_L = 2A (5)	1.80		3.2 4.9	V V
V_{sens}	Sensing Voltage (pins 1, 15)		–1 (1)		2	V

ELECTRICAL CHARACTERISTICS (continued)

Symbol	Parameter	Test Conditions	Min.	Typ.	Max.	Unit
T_1 (V_i)	Source Current Turn-off Delay	0.5 V_i to 0.9 I_L (2); (4)		1.5		s
T_2 (V_i)	Source Current Fall Time	0.9 I_L to 0.1 I_L (2); (4)		0.2		s
T_3 (V_i)	Source Current Turn-on Delay	0.5 V_i to 0.1 I_L (2); (4)		2		s
T_4 (V_i)	Source Current Rise Time	0.1 I_L to 0.9 I_L (2); (4)		0.7		s
T_5 (V_i)	Sink Current Turn-off Delay	0.5 V_i to 0.9 I_L (3); (4)		0.7		s
T_6 (V_i)	Sink Current Fall Time	0.9 I_L to 0.1 I_L (3); (4)		0.25		s
T_7 (V_i)	Sink Current Turn-on Delay	0.5 V_i to 0.9 I_L (3); (4)		1.6		s
T_8 (V_i)	Sink Current Rise Time	0.1 I_L to 0.9 I_L (3); (4)		0.2		s
fc (V_i)	Commutation Frequency	I_L = 2A		25	40	KHz
T_1 (V_{en})	Source Current Turn-off Delay	0.5 V_{en} to 0.9 I_L (2); (4)		3		s
T_2 (V_{en})	Source Current Fall Time	0.9 I_L to 0.1 I_L (2); (4)		1		s
T_3 (V_{en})	Source Current Turn-on Delay	0.5 V_{en} to 0.1 I_L (2); (4)		0.3		s
T_4 (V_{en})	Source Current Rise Time	0.1 I_L to 0.9 I_L (2); (4)		0.4		s
T_5 (V_{en})	Sink Current Turn-off Delay	0.5 V_{en} to 0.9 I_L (3); (4)		2.2		s
T_6 (V_{en})	Sink Current Fall Time	0.9 I_L to 0.1 I_L (3); (4)		0.35		s
T_7 (V_{en})	Sink Current Turn-on Delay	0.5 V_{en} to 0.9 I_L (3); (4)		0.25		s
T_8 (V_{en})	Sink Current Rise Time	0.1 I_L to 0.9 I_L (3); (4)		0.1		s

1) 1)Sensing voltage can be –1 V for t 50 sec; in steady state V_{sens} min – 0.5 V.
2) See fig. 2.
3) See fig. 4.
4) The load must be a pure resistor.

Figure 1 : Typical Saturation Voltage vs. Output Current.

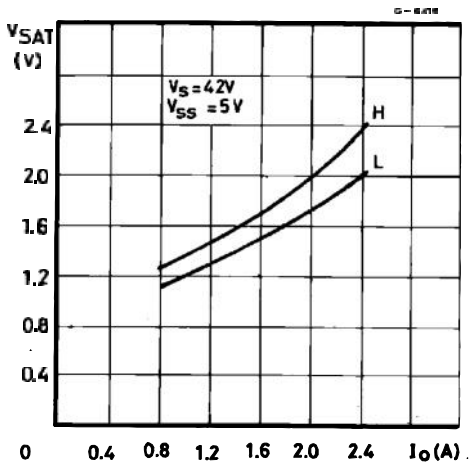

Figure 2 : Switching Times Test Circuits.

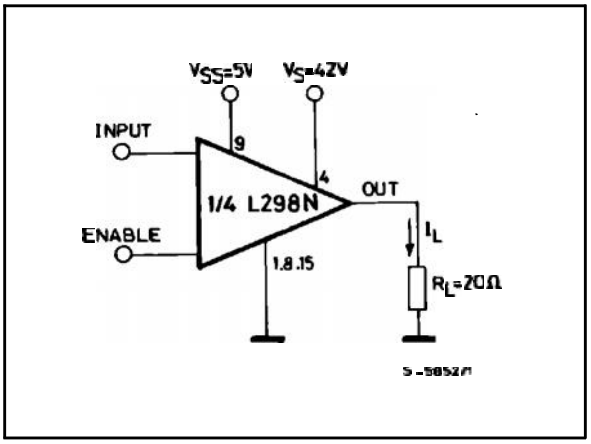

Note : For INPUT Switching, set EN = H
For ENABLE Switching, set IN = H

Figure 7 : For higher currents, outputs can be paralleled. Take care to parallel channel 1 with channel 4 and channel 2 with channel 3.

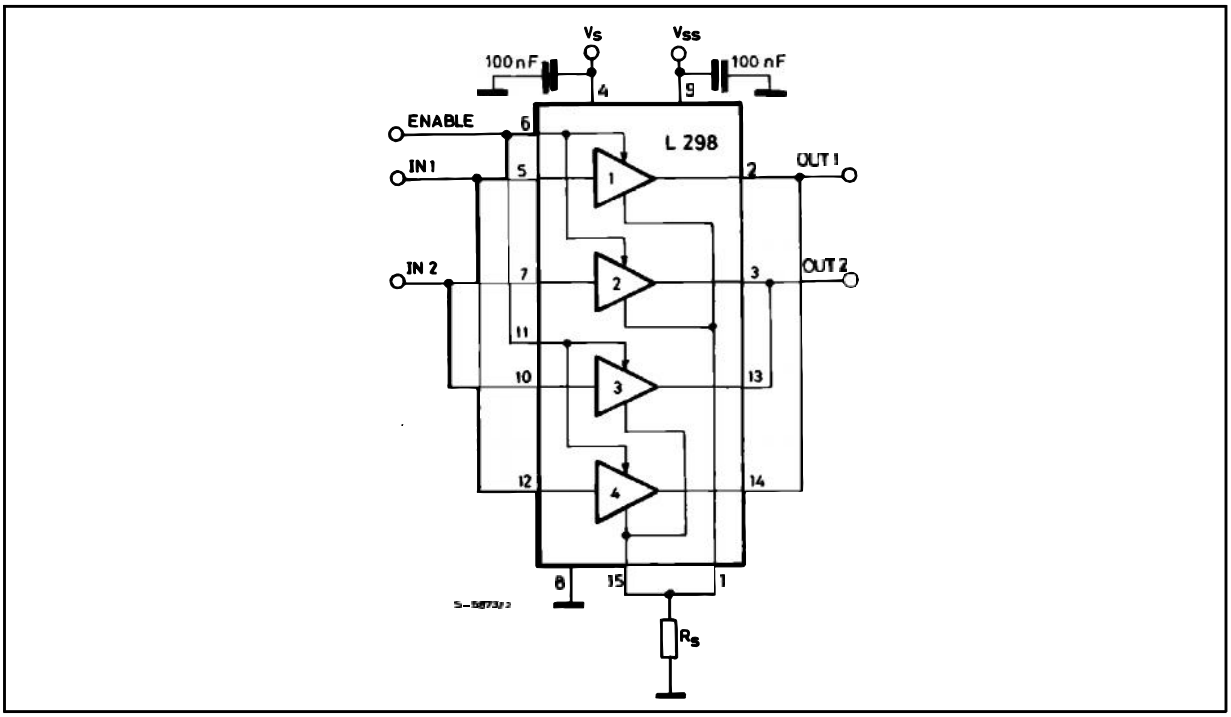

APPLICATION INFORMATION (Refer to the block diagram)

1.1. POWER OUTPUT STAGE

The L298 integrates two power output stages (A ; B). The power output stage is a bridge configuration and its outputs can drive an inductive load in common or differenzial mode, depending on the state of the inputs. The current that flows through the load comes out from the bridge at the sense output : an external resistor (R_{SA} ; R_{SB}.) allows to detect the intensity of this current.

1.2. INPUT STAGE

Each bridge is driven by means of four gates the input of which are In1 ; In2 ; EnA and In3 ; In4 ; EnB. The In inputs set the bridge state when The En input is high ; a low state of the En input inhibits the bridge. All the inputs are TTL compatible.

2. SUGGESTIONS

A non inductive capacitor, usually of 100 nF, must be foreseen between both Vs and Vss, to ground, as near as possible to GND pin. When the large capacitor of the power supply is too far from the IC, a second smaller one must be foreseen near the L298.

The sense resistor, not of a wire wound type, must be grounded near the negative pole of Vs that must be near the GND pin of the I.C.

Each input must be connected to the source of the driving signals by means of a very short path.

Turn-On and Turn-Off : Before to Turn-ON the Supply Voltage and before to Turn it OFF, the Enable input must be driven to the Low state.

3. APPLICATIONS

Fig 6 shows a bidirectional DC motor control Schematic Diagram for which only one bridge is needed. The external bridge of diodes D1 to D4 is made by four fast recovery elements (trr 200 nsec) that must be chosen of a VF as low as possible at the worst case of the load current.

The sense output voltage can be used to control the current amplitude by chopping the inputs, or to provide overcurrent protection by switching low the enable input.

The brake function (Fast motor stop) requires that the Absolute Maximum Rating of 2 Amps must never be overcome.

When the repetitive peak current needed from the load is higher than 2 Amps, a paralleled configuration can be chosen (See Fig.7).

An external bridge of diodes are required when inductive loads are driven and when the inputs of the IC are chopped ; Shottky diodes would be preferred.

T
E3
1 10

General: info@parallax.com
Technical: support@parallax.com
Web Site: www.parallax.com
Educational: www.stampsinclass.com

599 Menlo Drive, Suite 100
Rocklin, California 95765, USA
Office: (916) 624-8333
Fax: (916) 624-8003

PING)))™ Ultrasonic Distance Sensor (#28015)

The Parallax PING))) ultrasonic distance sensor provides precise, non-contact distance measurements from about 2 cm (0.8 inches) to 3 meters (3.3 yards). It is very easy to connect to BASIC Stamp® or Javelin Stamp microcontrollers, requiring only one I/O pin.

The PING))) sensor works by transmitting an ultrasonic (well above human hearing range) burst and providing an output pulse that corresponds to the time required for the burst echo to return to the sensor. By measuring the echo pulse width the distance to target can easily be calculated.

Features

- Supply Voltage – 5 VDC
- Supply Current – 30 mA typ; 35 mA max
- Range – 2 cm to 3 m (0.8 in to 3.3 yrds)
- Input Trigger – positive TTL pulse, 2 uS min, 5 µs typ.
- Echo Pulse – positive TTL pulse, 115 uS to 18.5 ms
- Echo Hold-off – 750 µs from fall of Trigger pulse
- Burst Frequency – 40 kHz for 200 µs
- Burst Indicator LED shows sensor activity
- Delay before next measurement – 200 µs
- Size – 22 mm H x 46 mm W x 16 mm D (0.84 in x 1.8 in x 0.6 in)

Dimensions

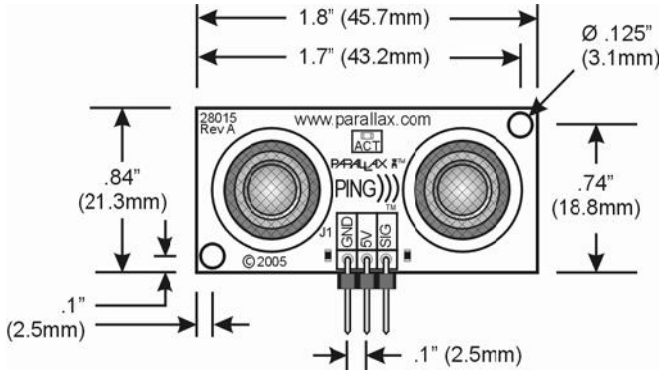

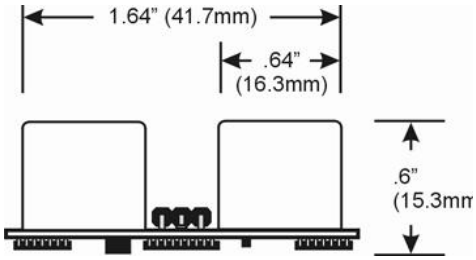

Pin Definitions

GND	Ground (Vss)
5 V	5 VDC (Vdd)
SIG	Signal (I/O pin)

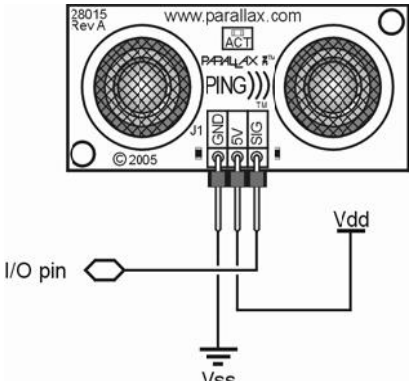

The PING))) sensor has a male 3-pin header used to supply power (5 VDC), ground, and signal. The header allows the sensor to be plugged into a solderless breadboard, or to be located remotely through the use of a standard servo extender cable (Parallax part #805-00002). Standard connections are show in the diagram to the right.

Quick-Start Circuit

This circuit allows you to quickly connect your PING))) sensor to a BASIC Stamp® 2 via the Board of Education® breadboard area. The PING))) module's GND pin connects to Vss, the 5 V pin connects to Vdd, and the SIG pin connects to I/O pin P15. This circuit will work with the example program Ping_Demo.BS2 listed on page 7.

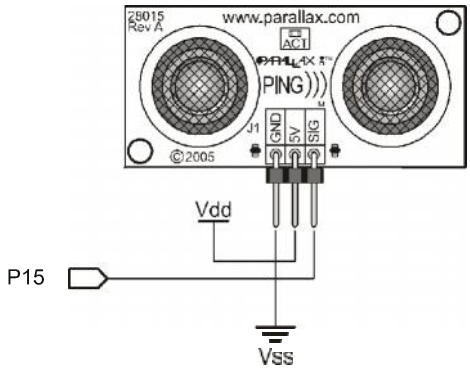

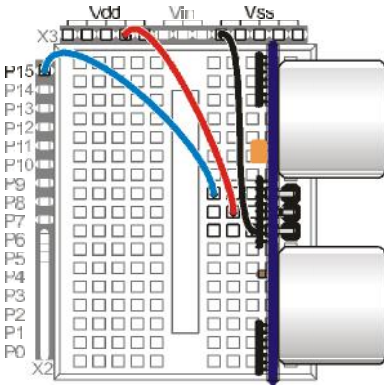

Servo Cable and Port Cautions

If you want to connect your PING))) sensor to a Board of Education using a servo extension cable, follow these steps:

1. When plugging the cable onto the PING))) sensor, connect Black to GND, Red to 5 V, and White to SIG.
2. Check to see if your Board of Education servo ports have a jumper, as shown at right.
3. If your Board of Education servo ports have a jumper, set it to Vdd as shown.
4. If your Board of Education servo ports do not have a jumper, do not use them with the PING))) sensor. These ports only provide Vin, not Vdd, and this may damage your PING))) sensor. Go to the next step.
5. Connect the servo cable directly to the breadboard with a 3-pin header. Then, use jumper wires to connect Black to Vss, Red to Vdd, and White to I/O pin P15.

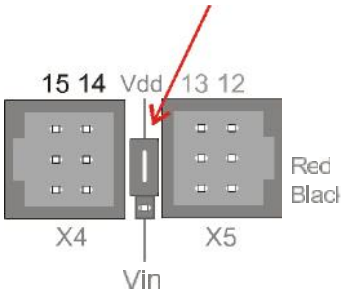

Board of Education Servo Port Jumper, Set to Vdd

Theory of Operation

The PING))) sensor detects objects by emitting a short ultrasonic burst and then "listening" for the echo. Under control of a host microcontroller (trigger pulse), the sensor emits a short 40 kHz (ultrasonic) burst. This burst travels through the air at about 1130 feet per second, hits an object and then bounces back to the sensor. The PING))) sensor provides an output pulse to the host that will terminate when the echo is detected, hence the width of this pulse corresponds to the distance to the target.

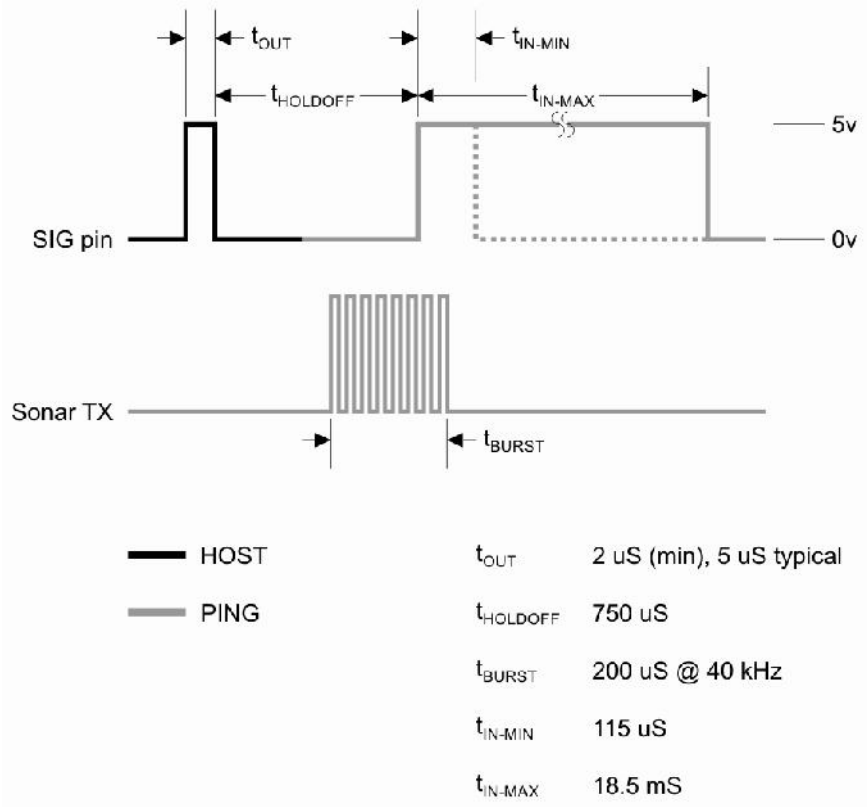

Test Data

The test data on the following pages is based on the PING))) sensor, tested in the Parallax lab, while connected to a BASIC Stamp microcontroller module. The test surface was a linoleum floor, so the sensor was elevated to minimize floor reflections in the data. All tests were conducted at room temperature, indoors, in a protected environment. The target was always centered at the same elevation as the PING))) sensor.

A1301 and A1302

Continuous-Time Ratiometric Linear Hall Effect Sensor ICs

Features and Benefits

- Low-noise output
- Fast power-on time
- Ratiometric rail-to-rail output
- 4.5 to 6.0 V operation
- Solid-state reliability
- Factory-programmed at end-of-line for optimum performance
- Robust ESD performance

Packages: 3-pin SOT23W (suffix LH), and 3-pin SIP (suffix UA)

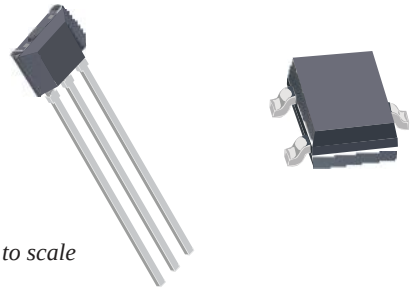

Not to scale

Description

The A1301 and A1302 are continuous-time, ratiometric, linear Hall-effect sensor ICs. They are optimized to accurately provide a voltage output that is proportional to an applied magnetic field. These devices have a quiescent output voltage that is 50% of the supply voltage. Two output sensitivity options are provided: 2.5 mV/G typical for the A1301, and 1.3 mV/G typical for the A1302.

The Hall-effect integrated circuit included in each device includes a Hall circuit, a linear amplifier, and a CMOS Class A output structure. Integrating the Hall circuit and the amplifier on a single chip minimizes many of the problems normally associated with low voltage level analog signals.

High precision in output levels is obtained by internal gain and offset trim adjustments made at end-of-line during the manufacturing process.

These features make the A1301 and A1302 ideal for use in position sensing systems, for both linear target motion and rotational target motion. They are well-suited for industrial applications over extended temperature ranges, from –40°C to 125°C.

Two device package types are available: LH, a 3-pin SOT23W type for surface mount, and UA, a 3-pin ultramini SIP for through-hole mount. They are lead (Pb) free (suffix, –*T*) with 100% matte tin plated leadframes.

Selection Guide

Part Number	Packing*	Package	Ambient, T_A	Sensitivity (Typical)
A1301EUA-T	Bulk, 500 pieces/bag	SIP	–40ºC to 85ºC	2.5 mV/G
A1301KLHLT-T	7-in. tape and reel, 3000 pieces/reel	Surface Mount	–40ºC to 125ºC	
A1301KUA-T	Bulk, 500 pieces/bag	SIP		
A1302ELHLT-T	7-in. tape and reel, 3000 pieces/reel	Surface Mount	–40ºC to 85ºC	1.3 mV/G
A1302KLHLT-T	7-in. tape and reel, 3000 pieces/reel	Surface Mount	–40ºC to 125ºC	
A1302KUA-T	Bulk, 500 pieces/bag	SIP		

*Contact Allegro™ for additional packing options.

Absolute Maximum Ratings

Characteristic	Symbol	Notes	Rating	Units
Supply Voltage	V_{CC}		8	V
Output Voltage	V_{OUT}		8	V
Reverse Supply Voltage	V_{RCC}		–0.1	V
Reverse Output Voltage	V_{ROUT}		–0.1	V
Output Sink Current	I_{OUT}		10	mA
Operating Ambient Temperature	T_A	Range E	–40 to 85	ºC
		Range K	–40 to 125	ºC
Maximum Junction Temperature	T_J(max)		165	ºC
Storage Temperature	T_{stg}		–65 to 170	ºC

Pin-out Drawings

Package LH

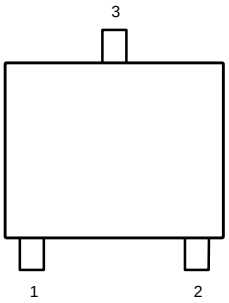

Package UA

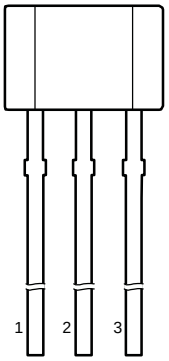

Terminal List

Symbol	Number		Description
	Package LH	Package UA	
VCC	1	1	Connects power supply to chip
VOUT	2	3	Output from circuit
GND	3	2	Ground

DEVICE CHARACTERISTICS over operating temperature range, T_A, and V_{CC} = 5 V, unless otherwise noted

Characteristic	Symbol	Test Conditions	Min.	Typ.	Max.	Units
Electrical Characteristics						
Supply Voltage	V_{CC}	Running, T_J < 165°C	4.5	–	6	V
Supply Current	I_{CC}	Output open	–	–	11	mA
Output Voltage	$V_{OUT(High)}$	I_{SOURCE} = –1 mA, Sens = nominal	4.65	4.7	–	V
	$V_{OUT(Low)}$	I_{SINK} = 1 mA, Sens = nominal	–	0.2	0.25	V
Output Bandwidth	BW		–	20	–	kHz
Power-On Time	t_{PO}	$V_{CC(min)}$ to 0.95 $V_{OUT;}$ B = ±1400 G; Slew rate = 4.5 V/µs to 4.5 V/100 ns	–	3	5	µs
Output Resistance	R_{OUT}	I_{SINK} ≤ 1 mA, I_{SOURCE} ≥ –1 mA	–	2	5	Ω
Wide Band Output Noise, rms	V_{OUTN}	External output low pass filter ≤ 10 kHz; Sens = nominal	–	150	–	µV
Ratiometry						
Quiescent Output Voltage Error with respect to ΔV_{CC}[1]	$\Delta V_{OUTQ(V)}$	T_A = 25°C	–	–	±3.0	%
Magnetic Sensitivity Error with respect to ΔV_{CC}[2]	$\Delta Sens_{(V)}$	T_A = 25°C	–	–	±3.0	%
Output						
Linearity	Lin	T_A = 25°C	–	–	±2.5	%
Symmetry	Sym	T_A = 25°C	–	–	±3.0	%
Magnetic Characteristics						
Quiescent Output Voltage	V_{OUTQ}	B = 0 G; T_A = 25°C	2.4	2.5	2.6	V
Quiescent Output Voltage over Operating Temperature Range	$V_{OUTQ(\Delta T_A)}$	B = 0 G	2.2	–	2.8	V
Magnetic Sensitivity	Sens	A1301; T_A = 25°C	2.0	2.5	3.0	mV/G
		A1302; T_A = 25°C	1.0	1.3	1.6	mV/G
Magnetic Sensitivity over Operating Temperature Range	$Sens_{(\Delta T_A)}$	A1301	1.8	–	3.2	mV/G
		A1302	0.85	–	1.75	mV/G

[1]Refer to equation (4) in Ratiometric section on page 4.
[2]Refer to equation (5) in Ratiometric section on page 4.

LAMPIRAN C

GAMBAR REALISASI ROBOT MOBIL

BAGIAN KIRI ROBOT MOBIL

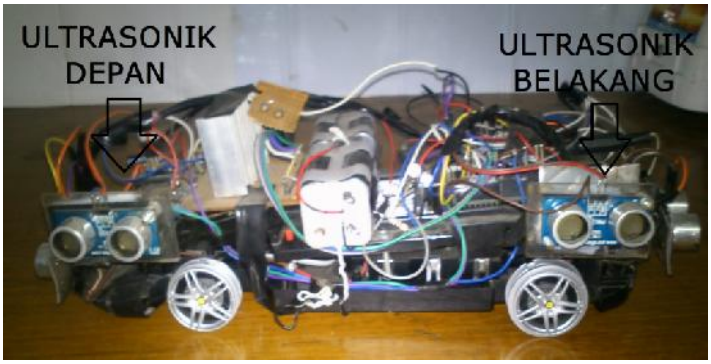

BAGIAN DEPAN DAN BELAKANG ROBOT MOBIL

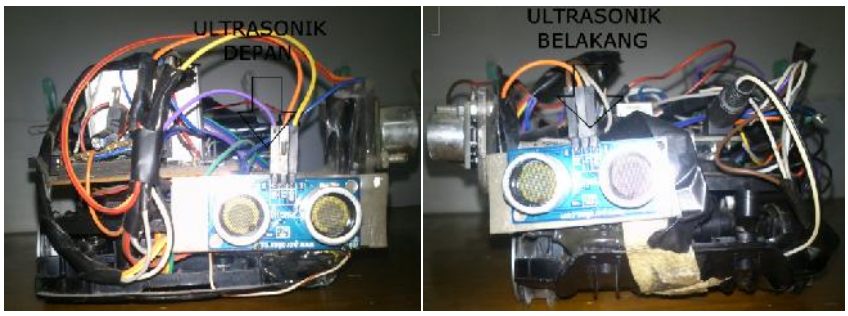

RODA KANAN BELAKANG ROBOT MOBIL

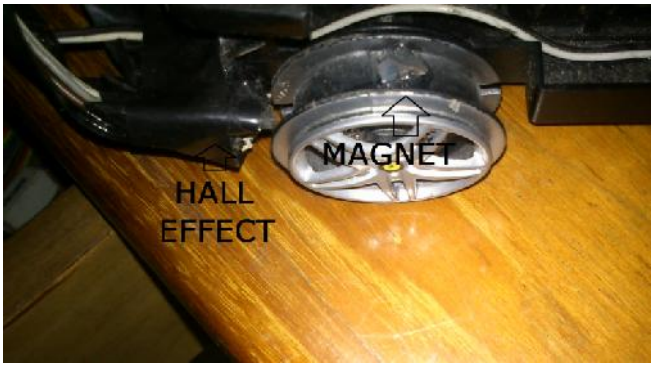

C-1

Realisasi Pengujian Mencari parkir dan mengatur posisi parkir pada jarak 70 cm

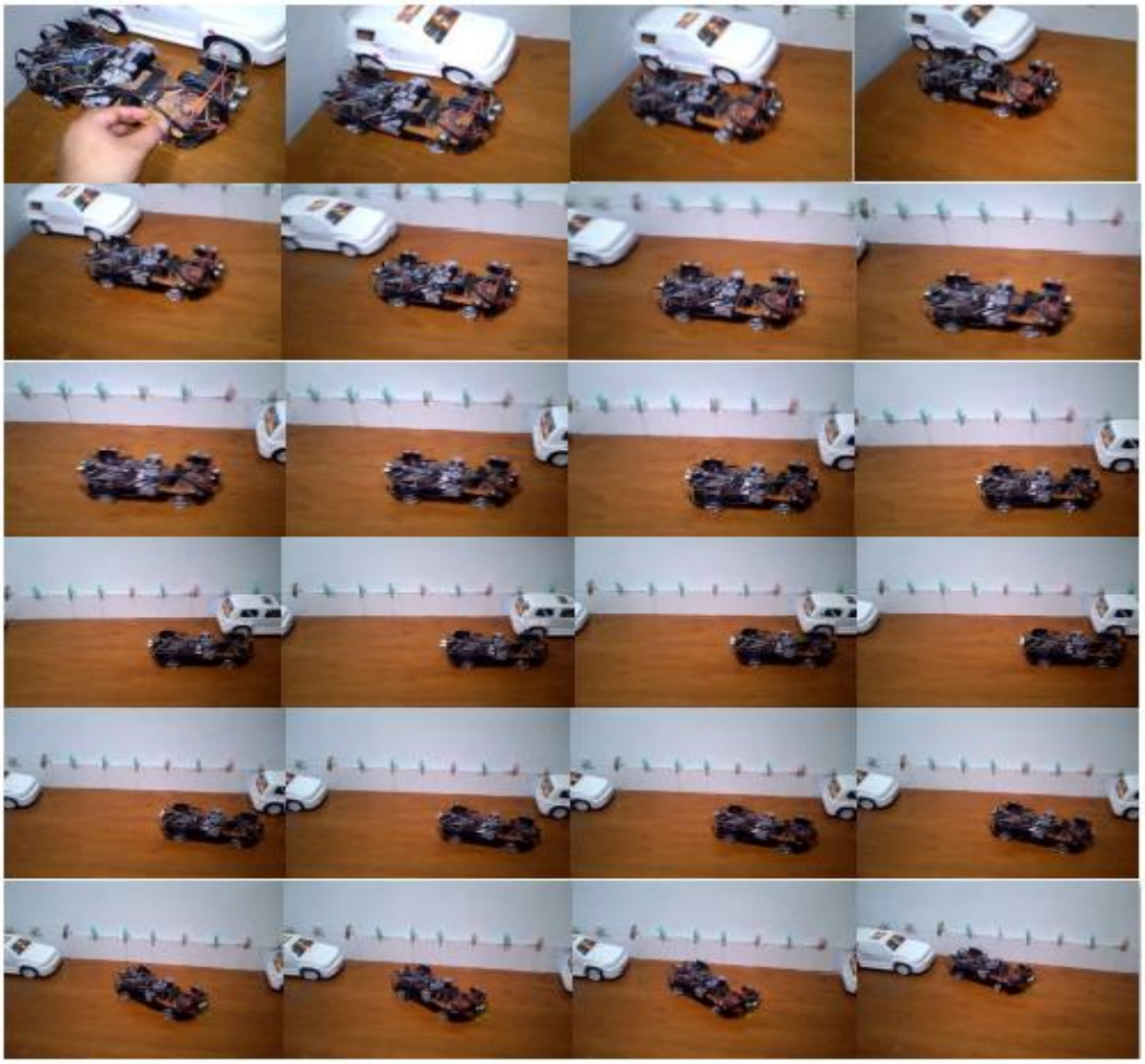

Realisasi Pengujian Mencari parkir dan mengatur posisi parkir dengan tanpa benda di depan