# LAMPIRAN A

Foto Alat

Tampak Depan

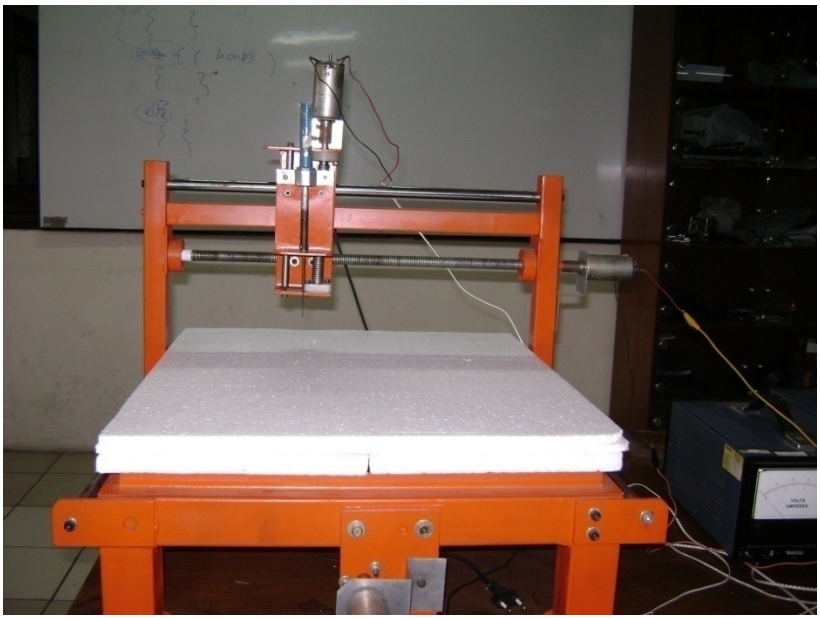

Tampak Atas

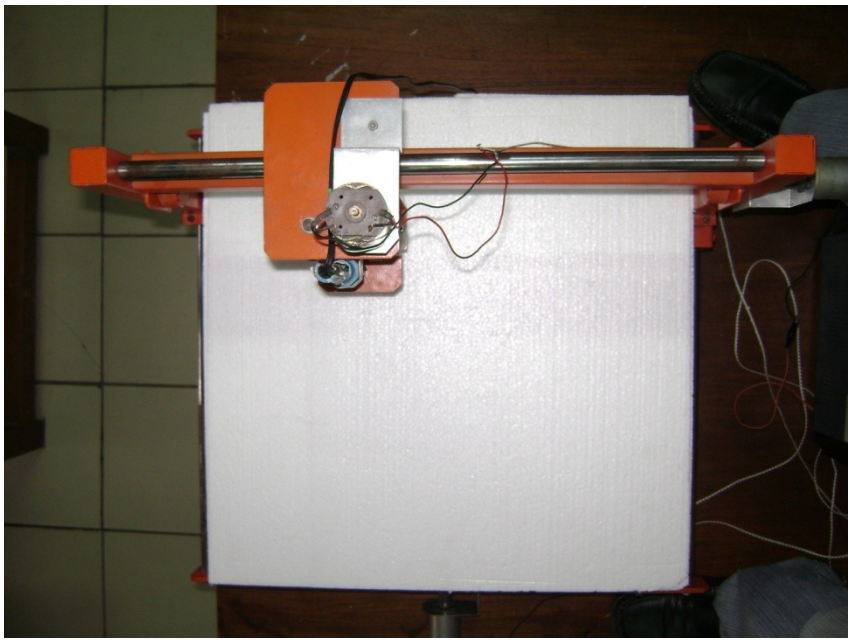

Rangkaian Pengontrol Mikro

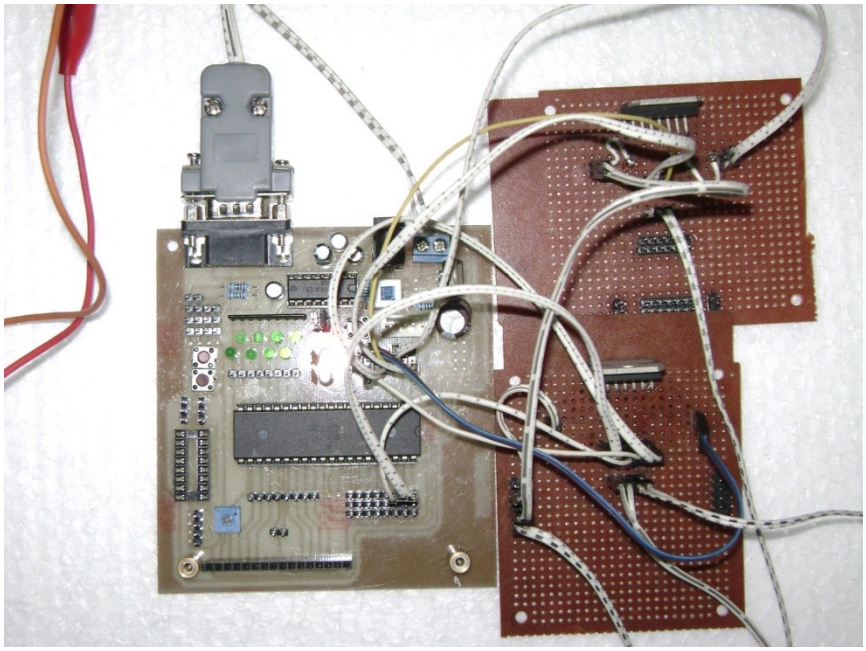

# LAMPIRAN B

## PROGRAM UTAMA

**MIKROKONTROLER ATMEGA16**

```
/*****************************************************
This program was produced by the
CodeWizardAVR V1.25.3 Professional
Automatic Program Generator
© Copyright 1998-2007 Pavel Haiduc, HP InfoTech s.r.l.
http://www.hpinfotech.com
Project :
Version :
Date    : 8/20/2009
Author  : Yogi Agus
Company : UKM
Comments:

Chip type           : ATmega16
Program type        : Application
Clock frequency     : 11.052900 MHz
Memory model        : Small
External SRAM size  : 0
Data Stack size     : 256
*****************************************************/
#include <mega16.h>
#include <delay.h>



#define RXB8 1
#define TXB8 0
#define UPE 2
#define OVR 3
#define FE 4
#define UDRE 5
#define RXC 7

#define FRAMING_ERROR (1<<FE)
#define PARITY_ERROR (1<<UPE)
#define DATA_OVERRUN (1<<OVR)
#define DATA_REGISTER_EMPTY (1<<UDRE)
#define RX_COMPLETE (1<<RXC)

void geser_kanan(void);     // gerak sumbu  x positif
void geser_kiri(void);      // gerak sumbu x negatif
void geser_turun(void);     //  gerak sumbu  z negatif
```

```
void geser_naik(void);        // gerak sumbu  z positif
void geser_maju(void);        // gerak sumbu y negatif
void geser_mundur(void);  //gerak sumbu y negatif

void stop(void);
unsigned char a,b,c,d,e,f,g,h,x;



// USART Receiver buffer
#define RX_BUFFER_SIZE 8
char rx_buffer[RX_BUFFER_SIZE];

#if RX_BUFFER_SIZE<256
unsigned char rx_wr_index,rx_rd_index,rx_counter;
#else
unsigned int rx_wr_index,rx_rd_index,rx_counter;
#endif

// This flag is set on USART Receiver buffer overflow
bit rx_buffer_overflow;

// USART Receiver interrupt service routine
interrupt [USART_RXC] void usart_rx_isr(void)
{
char status,data;
status=UCSRA;
data=UDR;
if ((status & (FRAMING_ERROR | PARITY_ERROR |
DATA_OVERRUN))==0)
   {
   rx_buffer[rx_wr_index]=data;
   if (++rx_wr_index == RX_BUFFER_SIZE) rx_wr_index=0;
   if (++rx_counter == RX_BUFFER_SIZE)

  {
      rx_counter=0;
      rx_buffer_overflow=1;
      };
   };
}

#ifndef _DEBUG_TERMINAL_IO_
// Get a character from the USART Receiver buffer
#define _ALTERNATE_GETCHAR_
```

```
#pragma used+
char getchar(void)
{
char data;

while (rx_counter==0);
data=rx_buffer[rx_rd_index];
if (++rx_rd_index == RX_BUFFER_SIZE) rx_rd_index=0;
#asm("cli")
--rx_counter;
#asm("sei")
return data;
}
#pragma used-
#endif
// Standard Input/Output functions
#include <stdio.h>
#include <delay.h>

// Declare your global variables here

char var_terima_data[32] ;       //Variabel array yang berfungsi untuk menyimpan
data dari komputer
int count_terima_serial;       //Variabel yang berfungsi untuk mengcounter jumlah
data yang masuk ke mikro
int i;

void main(void)
{
// Declare your local variables here

PORTA=0x00;  //Port A di set output buat motor DC
DDRA=0xFF;
PORTB=0x00;  //Port B di set output buat motor DC
DDRB=0xFF;
PORTC=0x01;
DDRC=0x00;
PORTD=0x01; //Port D.0 di set input pull-up  buat receive UART, Port D.1 di set
output low buat transmit UART
DDRD=0x02;


// USART initialization
// Communication Parameters: 8 Data, 1 Stop, No Parity
// USART Receiver: On
// USART Transmitter: On
```

```
// USART Mode: Asynchronous
// USART Baud rate: 9600
UCSRA=0x00;
UCSRB=0x98;
UCSRC=0x86;
UBRRH=0x00;
UBRRL=0x47;
/*Inisialisasi Variabel*/
count_terima_serial = 0;
x=0;

// Global enable interrupts
#asm("sei")
while (1)
    {
        for(i=1;i<=13;i++)
        {
         var_terima_data[i] = getchar();
         a = var_terima_data[i] & (0x80);
           if(a == 0x80)
             {
             geser_turun ();
             geser_naik ();
             geser_kanan(();
             stop();
             }
           if(a == 0x00)
             {
             Geser_kanan ();
             stop();
             }

         b = var_terima_data[i] & (0x40);
           if(b == 0x40)
              {
             geser_turun ();
             geser_naik ();
             geser_kanan(();
             stop();
             }
           if(b == 0x00)
             {
             Geser_kanan ();
             stop();
             }
```

```
c = var_terima_data[i] & (0x20);
   if(c == 0x20)
     {
    geser_turun ();
    geser_naik ();
    geser_kanan(();
    stop();
    }
  if(c == 0x00)
    {
    Geser_kanan ();
    stop();
    }

d = var_terima_data[i] & (0x10);
   if(d == 0x10)
     {
    geser_turun ();
    geser_naik ();
    geser_kanan(();
    stop();
    }
  if(d == 0x00)
    {
    Geser_kanan ();
    stop();
    }


e = var_terima_data[i] & (0x08);
   if(e == 0x08)
     {
    geser_turun ();
    geser_naik ();
    geser_kanan(();
    stop();
    }
  if(a == 0x00)
    {
    Geser_kanan ();
    stop();
    }


f = var_terima_data[i] & (0x04);
```

```
    if(f == 0x04)
      {
     geser_turun ();
     geser_naik ();
     geser_kanan(();
     stop();
     }
   if(f == 0x00)
     {
     Geser_kanan ();
     stop();
     }



 g = var_terima_data[i] & (0x02);
    if(g == 0x02)
     {
     geser_turun ();
     geser_naik ();
     geser_kanan(();
     stop();
     }
   if(g == 0x00)
     {
     Geser_kanan ();
     stop();
     }

h = var_terima_data[i] & (0x01);
    if(h == 0x01)
      {
     geser_turun ();
     geser_naik ();
     geser_kanan(();
     stop();
     }
   if(h == 0x00)
     {
     Geser_kanan ();
     stop();
     }


    putchar('1');
}
```

```
            {
            geser_kiri();
            }
            geser_maju();
            stop();
            putchar('2');
            x++;


            if(x>=100)
            {
            geser_mundur();
            x=0;
            }

        }
}

void geser_kanan(void);

  {
     PORTA.0=1;
     PORTA.1=0;
     PORTA.2=1;
     delay_ms(150);
     PORTA.2=0;
     delay_ms(500);
  }
void geser_kiri(void);

  {
     PORTA.0=0;
     PORTA.1=1;
     PORTA.2=1;
     delay_ms(15600);
  }

void geser_maju(void);
  {
     PORTB.3=1;
     PORTB.4=0;
     PORTB.5=1;
     delay_ms(150);
```

```
    PORTB.5=0;
  }
  void geser_mundur(void);
  {
    PORTB.3=0;
    PORTB.4=1;
    PORTB.5=1;
    delay_ms(15000);
    PORTB.5=0;
  }


void geser_naik(void);
  {
    PORTB.0=0;
    PORTB.1=1;
    PORTB.2=1;
    delay_ms(1000);
    PORTB.2=0;
   }


void geser_turun(void);
  {
    PORTB.0=1;
    PORTB.1=0;
    PORTB.2=1;
    delay_ms(1000);
    PORTB.2=0;
  }

void stop(void)
   {
    PORTA.2=0;
    PORTB.5=0;
    PORTB.2=0;
    delay_ms(500);
   }
```

**LISTING PROGRAM Visual Basic 6.0**

```
Private Sub Control_Enable()
   cmd_CLEAR.Enabled = True
   sldr_LEVEL.Enabled = True
   cmd_EXECUTE.Enabled = True
   cmd_LOAD.Enabled = False
End Sub
Private Sub Control_Disable()
   cmd_CLEAR.Enabled = False
   sldr_LEVEL.Enabled = False
   cmd_EXECUTE.Enabled = False
   cmd_LOAD.Enabled = True
End Sub

Private Sub Control_Disable_Full()
   cmd_CLEAR.Enabled = False
   sldr_LEVEL.Enabled = False
   cmd_EXECUTE.Enabled = False
   cmd_LOAD.Enabled = False
   sldr_LEVEL.Enabled = False
   cmd_EXECUTE.Enabled = False
End Sub


Private Sub Control_Enable_Full()
   cmd_CLEAR.Enabled = True
   sldr_LEVEL.Enabled = True
   cmd_EXECUTE.Enabled = True
   cmd_LOAD.Enabled = True
   sldr_LEVEL.Enabled = True
   cmd_EXECUTE.Enabled = True
End Sub

Private Sub cmd_CLEAR_Click()
   Call Control_Disable_Full

   STRIKE = 0

   For y = 1 To pic_PROCESSOR.ScaleHeight
      For x = 1 To pic_PROCESSOR.ScaleWidth
         pic_PROCESSOR.PSet (x, y), RGB(255, 255, 255)
         STRIKE = STRIKE + 1
         bar_PROCESS.Value = (STRIKE / (pic_PROCESSOR.ScaleWidth *
pic_PROCESSOR.ScaleHeight)) * 100
```

```
        Next x
    Next y

    With img_PROCESSOR
            .Picture = pic_PROCESSOR.Image
            .Refresh
            rtb_MATRIX.Text = Empty


    End With

    bar_PROCESS.Value = 0
    Call Control_Disable
End Sub

Private Sub cmd_EXECUTE_Click()
    com_TxRx.PortOpen = True
    pic_PROCESSOR.AutoRedraw = True

    Call Control_Disable_Full

    STRIKE = 0
    FIRE = False
    For y = 1 To pic_PROCESSOR.ScaleHeight
        For x = 1 To pic_PROCESSOR.ScaleWidth

            TMP = pic_PROCESSOR.Point(x, y)

            RED = TMP And RGB(255, 0, 0)
            GREEN = Int((TMP And RGB(0, 255, 0)) / 256)
            BLUE = Int(((TMP And RGB(0, 0, 255)) / 256) / 256)

            GREY = (RED + GREEN + BLUE) / 3

            If GREY >= sldr_LEVEL.Value Then
                BIN = 255
                MATRIX(x, y) = 0
            Else
                BIN = 0
                MATRIX(x, y) = 1
            End If

            pic_PROCESSOR.PSet (x, y), RGB(BIN, BIN, BIN)
            MATRIKS = MATRIKS & MATRIX(x, y)

            STRIKE = STRIKE + 1
```

```
            bar_PROCESS.Value = (STRIKE / (pic_PROCESSOR.ScaleWidth *
pic_PROCESSOR.ScaleHeight)) * 100
        Next x
        FIRE = False
        MATRIKS = MATRIKS & Chr(10)
    Next y

    With img_PROCESSOR
            .Picture = pic_PROCESSOR.Image
            .Refresh
    End With

    rtb_MATRIX.Text = MATRIKS

    Call TRANSLATE_PACKET
    Call SEND_PACKET

    bar_PROCESS.Value = 0

    Call Control_Enable_Full

End Sub

Private Sub cmd_EXIT_Click()
    Unload Me
End Sub

Private Sub cmd_LOAD_Click()

    With dlg_OPEN
        .DialogTitle = "Select Source Picture"
        .Filter = "Image Files (JPEG)|*.jpg|All Files | *.*"
        .ShowOpen
    End With

    If dlg_OPEN.FileName <> "" Then
        With pic_PROCESSOR
            .ScaleMode = 3
            .AutoRedraw = True
            .Picture = LoadPicture(dlg_OPEN.FileName)
        End With

        If (pic_PROCESSOR.ScaleHeight = 100) And
(pic_PROCESSOR.ScaleWidth = 104) Then
            With img_PROCESSOR
                .Picture = pic_PROCESSOR.Image
```

```
            .Refresh
        End With
        Call Control_Enable
    Else
        MsgBox "Maaf Dimensi Image yang di support hanya 104 x 100 pixel",
vbExclamation, Me.Caption
    End If
  End If
End Sub

Private Sub com_TxRx_OnComm()
  Dim bfrINPUT As Variant

  bfrINPUT = com_TxRx.Input

  If (bfrINPUT = "1") Then
kirim:
    Call SEND_PACKET
     ElseIf (bfrINPUT = "2") Then
    If Baris <= 104 Then
        Baris = Baris + 1
        GoTo kirim
    Else
        com_TxRx.PortOpen = False

    End If
  End If

End Sub
Private Sub Form_Load()
  Call Control_Disable
  sldr_LEVEL.Value = 128
  lbl_LEVEL.Caption = sldr_LEVEL.Value
    com_TxRx.InputLen = 0
  com_TxRx.RThreshold = 1
  com_TxRx.SThreshold = 1
  com_TxRx.DTREnable = True

End Sub

Private Sub sldr_LEVEL_Scroll()
  lbl_LEVEL.Caption = sldr_LEVEL.Value
End Sub
Public MATRIX(104, 100) As Byte
Public COUNTER As Integer
Dim TRANSLATOR(10400) As String
```

```
Public Sub TRANSLATE_PACKET()
   Dim i As Integer

   For LINKIN = 1 To 100
      For PARK = 1 To 104


         TRANSLATOR(i) = MATRIX(PARK, LINKIN)
         i = i + 1

      Next PARK
   Next LINKIN

End Sub



Public Function Str2Hex(aHEX As String) As Variant
   Dim b(8) As Integer
   Dim c(8) As Integer
   Dim d As Integer

   b(0) = Mid(aHEX, 1, 1)
   b(1) = Mid(aHEX, 2, 1)
   b(2) = Mid(aHEX, 3, 1)
   b(3) = Mid(aHEX, 4, 1)
   b(4) = Mid(aHEX, 5, 1)
   b(5) = Mid(aHEX, 6, 1)
   b(6) = Mid(aHEX, 7, 1)
   b(7) = Mid(aHEX, 8, 1)

   d = 0
   For i = 0 To 7
     If b(7 - i) = 1 Then
       c(i) = i
       d = d + 2 ^ (c(i))
     End If
   Next i
      Str2Hex = Chr$(d)
   End Function
```

```
Public Sub SEND_PACKET()
   Dim a As String
   Dim b(8) As Integer
   Dim c(8) As Integer
   Dim d As Integer
   Dim YELLOW As Integer
   Dim TRANSFORMER As String

   YELLOW = 0
      For i = 0 To 10400
            If (i > COUNTER) Then
         If (YELLOW = 8) Then
            YELLOW = 0
            frmMAIN.com_TxRx.Output = Str2Hex(TRANSFORMER)
            TRANSFORMER = ""
                  Exit Sub
        Else
            TRANSFORMER = TRANSFORMER & TRANSLATOR(i)
            YELLOW = YELLOW + 1
            COUNTER = COUNTER + 1
         End If
      End If
      Next i
  End Sub
```

# LAMPIRAN C
# DATASHEET

## Function Tables

EACH DRIVER

| INPUT TIN | OUTPUT TOUT |
|---|---|
| L | H |
| H | L |

H = high level, L = low level

EACH RECEIVER

| INPUT RIN | OUTPUT ROUT |
|---|---|
| L | H |
| H | L |

H = high level, L = low level

## logic diagram (positive logic)

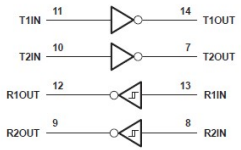






- Meets or Exceeds TIA/EIA-232-F and ITU Recommendation V.28
- Operates From a Single 5-V Power Supply With 1.0-μF Charge-Pump Capacitors
- Operates Up To 120 kbit/s
- Two Drivers and Two Receivers
- ±30-V Input Levels
- Low Supply Current . . . 8 mA Typical
- ESD Protection Exceeds JESD 22
  - 2000-V Human-Body Model (A114-A)
- Upgrade With Improved ESD (15-kV HBM) and 0.1-μF Charge-Pump Capacitors is Available With the MAX202
- Applications
  - TIA/EIA-232-F, Battery-Powered Systems, Terminals, Modems, and Computers

MAX232 . . . D, DW, N, OR NS PACKAGE
MAX232I . . . D, DW, OR N PACKAGE
(TOP VIEW)

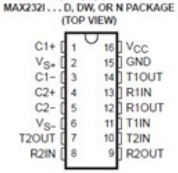


## description/ordering information

The MAX232 is a dual driver/receiver that includes a capacitive voltage generator to supply TIA/EIA-232-F voltage levels from a single 5-V supply. Each receiver converts TIA/EIA-232-F inputs to 5-V TTL/CMOS levels. These receivers have a typical threshold of 1.3 V, a typical hysteresis of 0.5 V, and can accept ±30-V inputs. Each driver converts TTL/CMOS input levels into TIA/EIA-232-F levels. The driver, receiver, and voltage-generator functions are available as cells in the Texas Instruments LinASIC™ library.

ORDERING INFORMATION

| $T_A$ | PACKAGE† | | ORDERABLE PART NUMBER | TOP-SIDE MARKING |
|---|---|---|---|---|
| 0°C to 70°C | PDIP (N) | Tube of 25 | MAX232N | MAX232N |
| | SOIC (D) | Tube of 40 | MAX232D | MAX232 |
| | | Reel of 2500 | MAX232DR | |
| | SOIC (DW) | Tube of 40 | MAX232DW | MAX232 |
| | | Reel of 2000 | MAX232DWR | |
| | SOP (NS) | Reel of 2000 | MAX232NSR | MAX232 |
| −40°C to 85°C | PDIP (N) | Tube of 25 | MAX232IN | MAX232IN |
| | SOIC (D) | Tube of 40 | MAX232ID | MAX232I |
| | | Reel of 2500 | MAX232IDR | |
| | SOIC (DW) | Tube of 40 | MAX232IDW | MAX232I |
| | | Reel of 2000 | MAX232IDWR | |

† Package drawings, standard packing quantities, thermal data, symbolization, and PCB design guidelines are available at www.ti.com/sc/package.

## DRIVER SECTION

### electrical characteristics over recommended ranges of supply voltage and operating free-air temperature range (see Note 4)

| PARAMETER | | | TEST CONDITIONS | MIN | TYP† | MAX | UNIT |
|---|---|---|---|---|---|---|---|
| $V_{OH}$ | High-level output voltage | T1OUT, T2OUT | $R_L$ = 3 kΩ to GND | 5 | 7 | | V |
| $V_{OL}$ | Low-level output voltage‡ | T1OUT, T2OUT | $R_L$ = 3 kΩ to GND | | −7 | −5 | V |
| $r_o$ | Output resistance | T1OUT, T2OUT | $V_{S+} = V_{S-} = 0$, $V_O = \pm 2$ V | 300 | | | Ω |
| $I_{OS}$§ | Short-circuit output current | T1OUT, T2OUT | $V_{CC}$ = 5.5 V, $V_O$ = 0 | | ±10 | | mA |
| $I_{IS}$ | Short-circuit input current | T1IN, T2IN | $V_I$ = 0 | | | 200 | µA |

† All typical values are at $V_{CC}$ = 5 V, $T_A$ = 25°C.
‡ The algebraic convention, in which the least-positive (most negative) value is designated minimum, is used in this data sheet for logic voltage levels only.
§ Not more than one output should be shorted at a time.
NOTE 4: Test conditions are C1−C4 = 1 µF at $V_{CC}$ = 5 V ± 0.5 V.

### switching characteristics, $V_{CC}$ = 5 V, $T_A$ = 25°C (see Note 4)

| PARAMETER | | TEST CONDITIONS | MIN | TYP | MAX | UNIT |
|---|---|---|---|---|---|---|
| SR | Driver slew rate | $R_L$ = 3 kΩ to 7 kΩ, See Figure 2 | | | 30 | V/µs |
| SR(t) | Driver transition region slew rate | See Figure 3 | | 3 | | V/µs |
| | Data rate | One TOUT switching | | 120 | | kbit/s |

NOTE 4: Test conditions are C1−C4 = 1 µF at $V_{CC}$ = 5 V ± 0.5 V.

## RECEIVER SECTION

### electrical characteristics over recommended ranges of supply voltage and operating free-air temperature range (see Note 4)

| PARAMETER | | | TEST CONDITIONS | MIN | TYP† | MAX | UNIT |
|---|---|---|---|---|---|---|---|
| $V_{OH}$ | High-level output voltage | R1OUT, R2OUT | $I_{OH}$ = −1 mA | 3.5 | | | V |
| $V_{OL}$ | Low-level output voltage‡ | R1OUT, R2OUT | $I_{OL}$ = 3.2 mA | | | 0.4 | V |
| $V_{IT+}$ | Receiver positive-going input threshold voltage | R1IN, R2IN | $V_{CC}$ = 5 V, $T_A$ = 25°C | | 1.7 | 2.4 | V |
| $V_{IT-}$ | Receiver negative-going input threshold voltage | R1IN, R2IN | $V_{CC}$ = 5 V, $T_A$ = 25°C | 0.8 | 1.2 | | V |
| $V_{hys}$ | Input hysteresis voltage | R1IN, R2IN | $V_{CC}$ = 5 V | 0.2 | 0.5 | 1 | V |
| $r_i$ | Receiver input resistance | R1IN, R2IN | $V_{CC}$ = 5, $T_A$ = 25°C | 3 | 5 | 7 | kΩ |

† All typical values are at $V_{CC}$ = 5 V, $T_A$ = 25°C.
‡ The algebraic convention, in which the least-positive (most negative) value is designated minimum, is used in this data sheet for logic voltage levels only.
NOTE 4: Test conditions are C1−C4 = 1 µF at $V_{CC}$ = 5 V ± 0.5 V.

### switching characteristics, $V_{CC}$ = 5 V, $T_A$ = 25°C (see Note 4 and Figure 1)

| PARAMETER | | TYP | UNIT |
|---|---|---|---|
| $t_{PLH(R)}$ | Receiver propagation delay time, low- to high-level output | 500 | ns |
| $t_{PHL(R)}$ | Receiver propagation delay time, high- to low-level output | 500 | ns |

NOTE 4: Test conditions are C1−C4 = 1 µF at $V_{CC}$ = 5 V ± 0.5 V.





### absolute maximum ratings over operating free-air temperature range (unless otherwise noted)†

Input supply voltage range, $V_{CC}$ (see Note 1) . . . . . −0.3 V to 6 V
Positive output supply voltage range, $V_{S+}$ . . . . . $V_{CC}$ − 0.3 V to 15 V
Negative output supply voltage range, $V_{S-}$ . . . . . −0.3 V to −15 V
Input voltage range, $V_I$: Driver . . . . . −0.3 V to $V_{CC}$ + 0.3 V
Receiver . . . . . ±30 V
Output voltage range, $V_O$: T1OUT, T2OUT . . . . . $V_{S-}$ − 0.3 V to $V_{S+}$ + 0.3 V
R1OUT, R2OUT . . . . . −0.3 V to $V_{CC}$ + 0.3 V
Short-circuit duration: T1OUT, T2OUT . . . . . Unlimited
Package thermal impedance, $\theta_{JA}$ (see Notes 2 and 3): D package . . . . . 73°C/W
DW package . . . . . 57°C/W
N package . . . . . 67°C/W
NS package . . . . . 64°C/W
Operating virtual junction temperature, $T_J$ . . . . . 150°C
Storage temperature range, $T_{stg}$ . . . . . −65°C to 150°C

† Stresses beyond those listed under "absolute maximum ratings" may cause permanent damage to the device. These are stress ratings only, and functional operation of the device at these or any other conditions beyond those indicated under "recommended operating conditions" is not implied. Exposure to absolute-maximum-rated conditions for extended periods may affect device reliability.
NOTES: 1. All voltages are with respect to network GND.
2. Maximum power dissipation is a function of $T_J(max)$, $\theta_{JA}$, and $T_A$. The maximum allowable power dissipation at any allowable ambient temperature is $P_D = (T_J(max) - T_A)/\theta_{JA}$. Operating at the absolute maximum $T_J$ of 150°C can affect reliability.
3. The package thermal impedance is calculated in accordance with JESD 51-7.

### recommended operating conditions

| | | | MIN | NOM | MAX | UNIT |
|---|---|---|---|---|---|---|
| $V_{CC}$ | Supply voltage | | 4.5 | 5 | 5.5 | V |
| $V_{IH}$ | High-level input voltage (T1IN,T2IN) | | 2 | | | V |
| $V_{IL}$ | Low-level input voltage (T1IN, T2IN) | | | | 0.8 | V |
| R1IN, R2IN | Receiver input voltage | | | | ±30 | V |
| $T_A$ | Operating free-air temperature | MAX232 | 0 | | 70 | °C |
| | | MAX232I | −40 | | 85 | |

### electrical characteristics over recommended ranges of supply voltage and operating free-air temperature (unless otherwise noted) (see Note 4 and Figure 4)

| PARAMETER | | TEST CONDITIONS | MIN | TYP‡ | MAX | UNIT |
|---|---|---|---|---|---|---|
| $I_{CC}$ | Supply current | $V_{CC}$ = 5.5 V, All outputs open, $T_A$ = 25°C | | 8 | 10 | mA |

‡ All typical values are at $V_{CC}$ = 5 V and $T_A$ = 25°C.
NOTE 4: Test conditions are C1−C4 = 1 µF at $V_{CC}$ = 5 V ± 0.5 V.

## PARAMETER MEASUREMENT INFORMATION

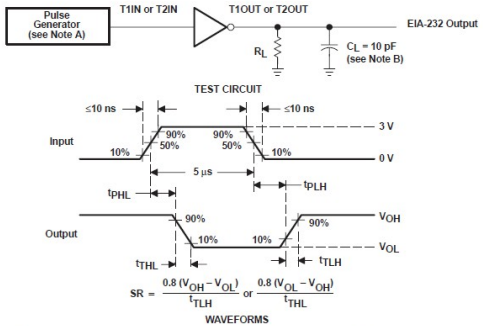


NOTES: A. The pulse generator has the following characteristics: $Z_O = 50\ \Omega$, duty cycle ≤ 50%.
B. $C_L$ includes probe and jig capacitance.

**Figure 2. Driver Test Circuit and Waveforms for $t_{PHL}$ and $t_{PLH}$ Measurements (5-µs Input)**

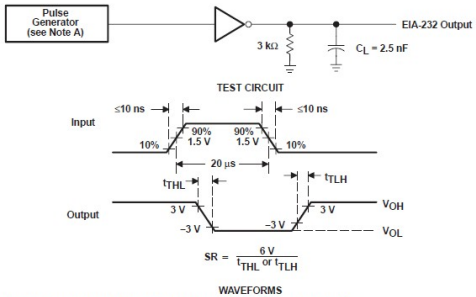


NOTE A: The pulse generator has the following characteristics: $Z_O = 50\ \Omega$, duty cycle ≤ 50%.

**Figure 3. Test Circuit and Waveforms for $t_{THL}$ and $t_{TLH}$ Measurements (20-µs Input)**





## PARAMETER MEASUREMENT INFORMATION

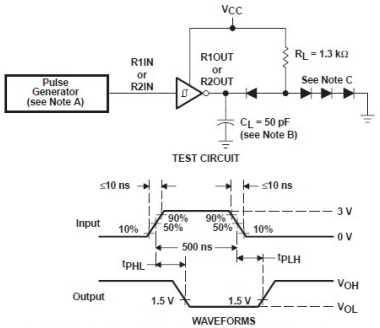


NOTES: A. The pulse generator has the following characteristics: $Z_O = 50\ \Omega$, duty cycle ≤ 50%.
B. $C_L$ includes probe and jig capacitance.
C. All diodes are 1N3064 or equivalent.

**Figure 1. Receiver Test Circuit and Waveforms for $t_{PHL}$ and $t_{PLH}$ Measurements**

## N (R–PDIP–T**) PLASTIC DUAL–IN–LINE PACKAGE

16 PINS SHOWN

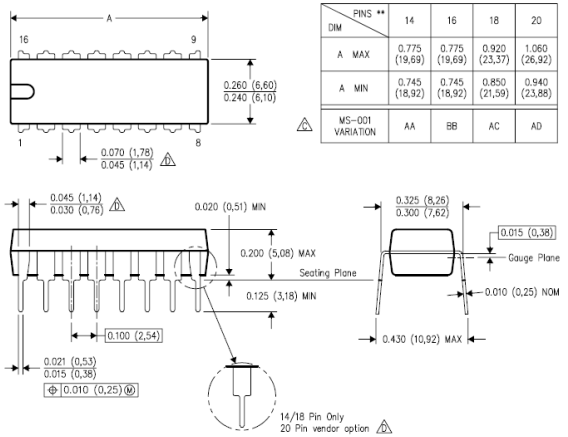


| DIM \ PINS ** | 14 | 16 | 18 | 20 |
|---|---|---|---|---|
| A MAX | 0.775 (19,69) | 0.775 (19,69) | 0.920 (23,37) | 1.060 (26,92) |
| A MIN | 0.745 (18,92) | 0.745 (18,92) | 0.850 (21,59) | 0.940 (23,88) |
| MS–001 VARIATION | AA | BB | AC | AD |

4040049/E 12/2002

NOTES: A. All linear dimensions are in inches (millimeters).
B. This drawing is subject to change without notice.
Falls within JEDEC MS–001, except 18 and 20 pin minimum body length (Dim A).
The 20 pin end lead shoulder width is a vendor option, either half or full width.





## APPLICATION INFORMATION

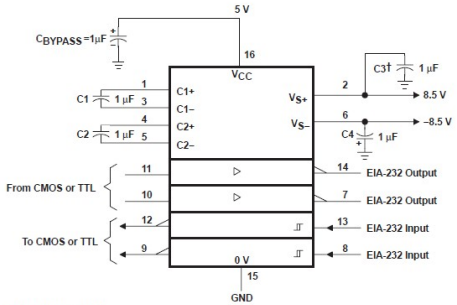


† C3 can be connected to $V_{CC}$ or GND.
NOTES: A. Resistor values shown are nominal.
B. Nonpolarized ceramic capacitors are acceptable. If polarized tantalum or electrolytic capacitors are used, they should be connected as shown. In addition to the 1-µF capacitors shown, the MAX202 can operate with 0.1-µF capacitors.

**Figure 4. Typical Operating Circuit**

MSOI003E – JANUARY 1995 – REVISED SEPTEMBER 2001

**DW (R-PDSO-G**)** — **PLASTIC SMALL-OUTLINE PACKAGE**

16 PINS SHOWN

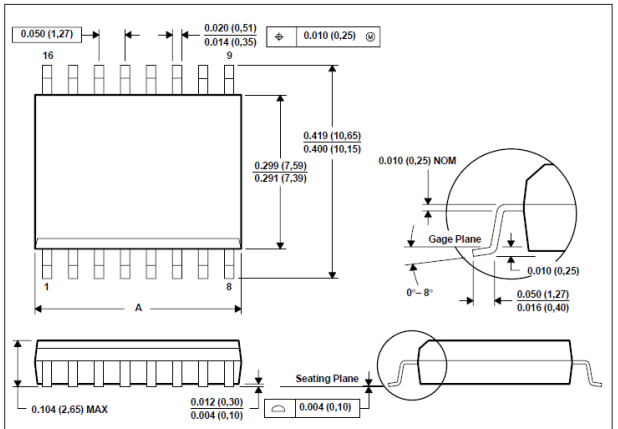


| DIM \ PINS ** | 16 | 18 | 20 | 24 | 28 |
|---|---|---|---|---|---|
| A MAX | 0.410 (10,41) | 0.462 (11,73) | 0.510 (12,95) | 0.610 (15,49) | 0.710 (18,03) |
| A MIN | 0.400 (10,16) | 0.453 (11,51) | 0.500 (12,70) | 0.600 (15,24) | 0.700 (17,78) |

4040000/E 08/01

NOTES: A. All linear dimensions are in inches (millimeters).
B. This drawing is subject to change without notice.
C. Body dimensions do not include mold flash or protrusion not to exceed 0.006 (0,15).
D. Falls within JEDEC MS-013





MSOI002B – JANUARY 1995 – REVISED SEPTEMBER 2001

**D (R-PDSO-G**)** — **PLASTIC SMALL-OUTLINE PACKAGE**

8 PINS SHOWN

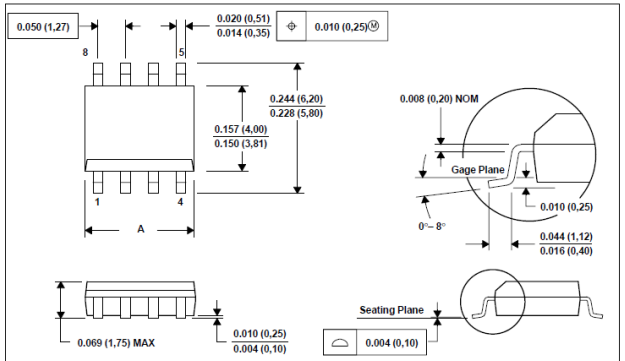


| DIM \ PINS ** | 8 | 14 | 16 |
|---|---|---|---|
| A MAX | 0.197 (5,00) | 0.344 (8,75) | 0.394 (10,00) |
| A MIN | 0.189 (4,80) | 0.337 (8,55) | 0.386 (9,80) |

4040047/E 09/01

NOTES: A. All linear dimensions are in inches (millimeters).
B. This drawing is subject to change without notice.
C. Body dimensions do not include mold flash or protrusion, not to exceed 0.006 (0,15).
D. Falls within JEDEC MS-012

## IMPORTANT NOTICE

Texas Instruments Incorporated and its subsidiaries (TI) reserve the right to make corrections, modifications, enhancements, improvements, and other changes to its products and services at any time and to discontinue any product or service without notice. Customers should obtain the latest relevant information before placing orders and should verify that such information is current and complete. All products are sold subject to TI's terms and conditions of sale supplied at the time of order acknowledgment.

TI warrants performance of its hardware products to the specifications applicable at the time of sale in accordance with TI's standard warranty. Testing and other quality control techniques are used to the extent TI deems necessary to support this warranty. Except where mandated by government requirements, testing of all parameters of each product is not necessarily performed.

TI assumes no liability for applications assistance or customer product design. Customers are responsible for their products and applications using TI components. To minimize the risks associated with customer products and applications, customers should provide adequate design and operating safeguards.

TI does not warrant or represent that any license, either express or implied, is granted under any TI patent right, copyright, mask work right, or other TI intellectual property right relating to any combination, machine, or process in which TI products or services are used. Information published by TI regarding third-party products or services does not constitute a license from TI to use such products or services or a warranty or endorsement thereof. Use of such information may require a license from a third party under the patents or other intellectual property of the third party, or a license from TI under the patents or other intellectual property of TI.

Reproduction of information in TI data books or data sheets is permissible only if reproduction is without alteration and is accompanied by all associated warranties, conditions, limitations, and notices. Reproduction of this information with alteration is an unfair and deceptive business practice. TI is not responsible or liable for such altered documentation.

Resale of TI products or services with statements different from or beyond the parameters stated by TI for that product or service voids all express and any implied warranties for the associated TI product or service and is an unfair and deceptive business practice. TI is not responsible or liable for any such statements.

Following are URLs where you can obtain information on other Texas Instruments products and application solutions:

| Products | | Applications | |
|---|---|---|---|
| Amplifiers | amplifier.ti.com | Audio | www.ti.com/audio |
| Data Converters | dataconverter.ti.com | Automotive | www.ti.com/automotive |
| DSP | dsp.ti.com | Broadband | www.ti.com/broadband |
| Interface | interface.ti.com | Digital Control | www.ti.com/digitalcontrol |
| Logic | logic.ti.com | Military | www.ti.com/military |
| Power Mgmt | power.ti.com | Optical Networking | www.ti.com/opticalnetwork |
| Microcontrollers | microcontroller.ti.com | Security | www.ti.com/security |
| | | Telephony | www.ti.com/telephony |
| | | Video & Imaging | www.ti.com/video |
| | | Wireless | www.ti.com/wireless |

Mailing Address: Texas Instruments
Post Office Box 655303 Dallas, Texas 75265



## MECHANICAL DATA

**NS (R-PDSO-G**)** — **PLASTIC SMALL-OUTLINE PACKAGE**

**14-PINS SHOWN**

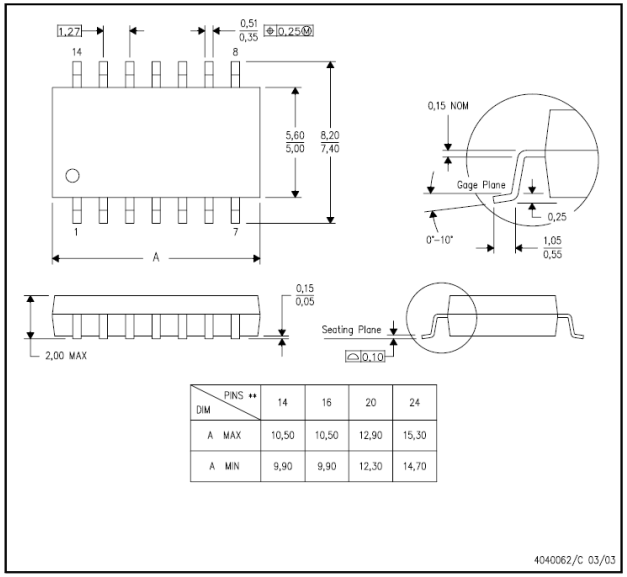


| DIM \ PINS ** | 14 | 16 | 20 | 24 |
|---|---|---|---|---|
| A MAX | 10,50 | 10,50 | 12,90 | 15,30 |
| A MIN | 9,90 | 9,90 | 12,30 | 14,70 |

4040062/C 03/03

NOTES:
A. All linear dimensions are in millimeters.
B. This drawing is subject to change without notice.
C. Body dimensions do not include mold flash or protrusion, not to exceed 0,15.

TEXAS INSTRUMENTS
www.ti.com

# L298

## DUAL FULL-BRIDGE DRIVER

- OPERATING SUPPLY VOLTAGE UP TO 46 V
- TOTAL DC CURRENT UP TO 4 A
- LOW SATURATION VOLTAGE
- OVERTEMPERATURE PROTECTION
- LOGICAL "0" INPUT VOLTAGE UP TO 1.5 V (HIGH NOISE IMMUNITY)


ORDERING NUMBERS : L298N (Multiwatt Vert.)
L298HN (Multiwatt Horiz.)
L298P (PowerSO20)

### DESCRIPTION

The L298 is an integrated monolithic circuit in a 15-lead Multiwatt and PowerSO20 packages. It is a high voltage, high current dual full-bridge driver designed to accept standard TTL logic levels and drive inductive loads such as relays, solenoids, DC and stepping motors. Two enable inputs are provided to enable or disable the device independently of the input signals. The emitters of the lower transistors of each bridge are connected together and the corresponding external terminal can be used for the connection of an external sensing resistor. An additional supply input is provided so that the logic works at a lower voltage.

### BLOCK DIAGRAM

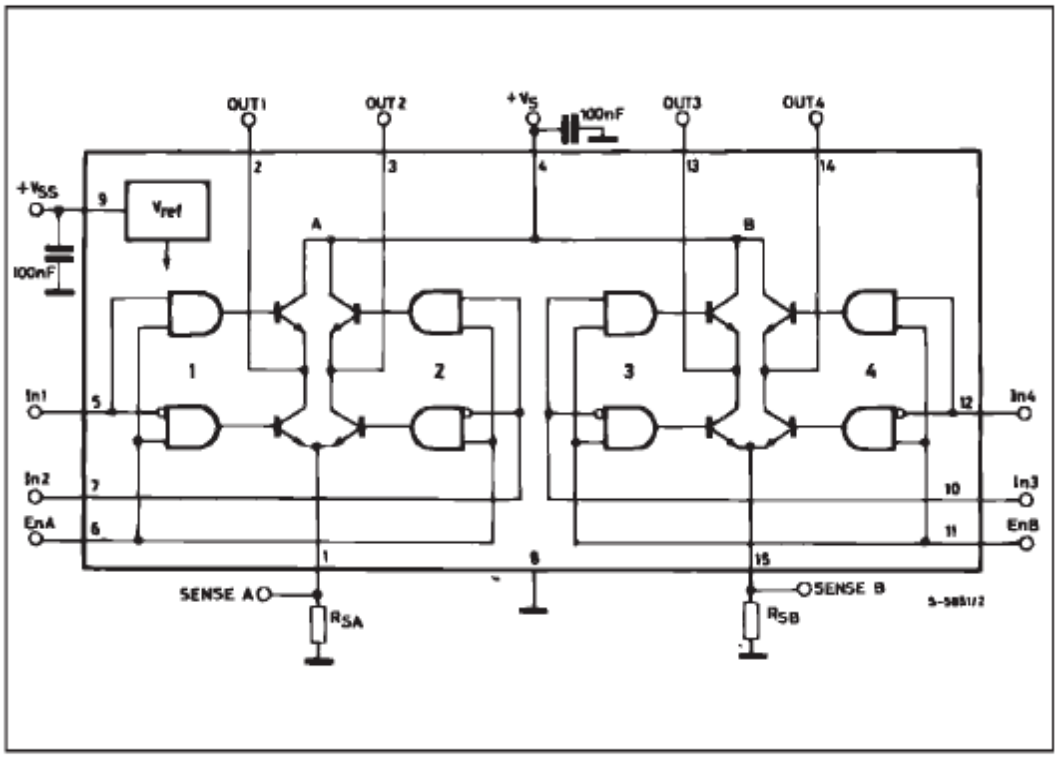

## ABSOLUTE MAXIMUM RATINGS

| Symbol | Parameter | Value | Unit |
|---|---|---|---|
| $V_S$ | Power Supply | 50 | V |
| $V_{SS}$ | Logic Supply Voltage | 7 | V |
| $V_I, V_{en}$ | Input and Enable Voltage | –0.3 to 7 | V |
| $I_O$ | Peak Output Current (each Channel)<br>– Non Repetitive (t = 100µs)<br>–Repetitive (80% on –20% off; $t_{on}$ = 10ms)<br>–DC Operation | <br>3<br>2.5<br>2 | <br>A<br>A<br>A |
| $V_{sens}$ | Sensing Voltage | –1 to 2.3 | V |
| $P_{tot}$ | Total Power Dissipation ($T_{case}$ = 75°C) | 25 | W |
| $T_{op}$ | Junction Operating Temperature | –25 to 130 | °C |
| $T_{stg}$, $T_j$ | Storage and Junction Temperature | –40 to 150 | °C |

## PIN CONNECTIONS (top view)

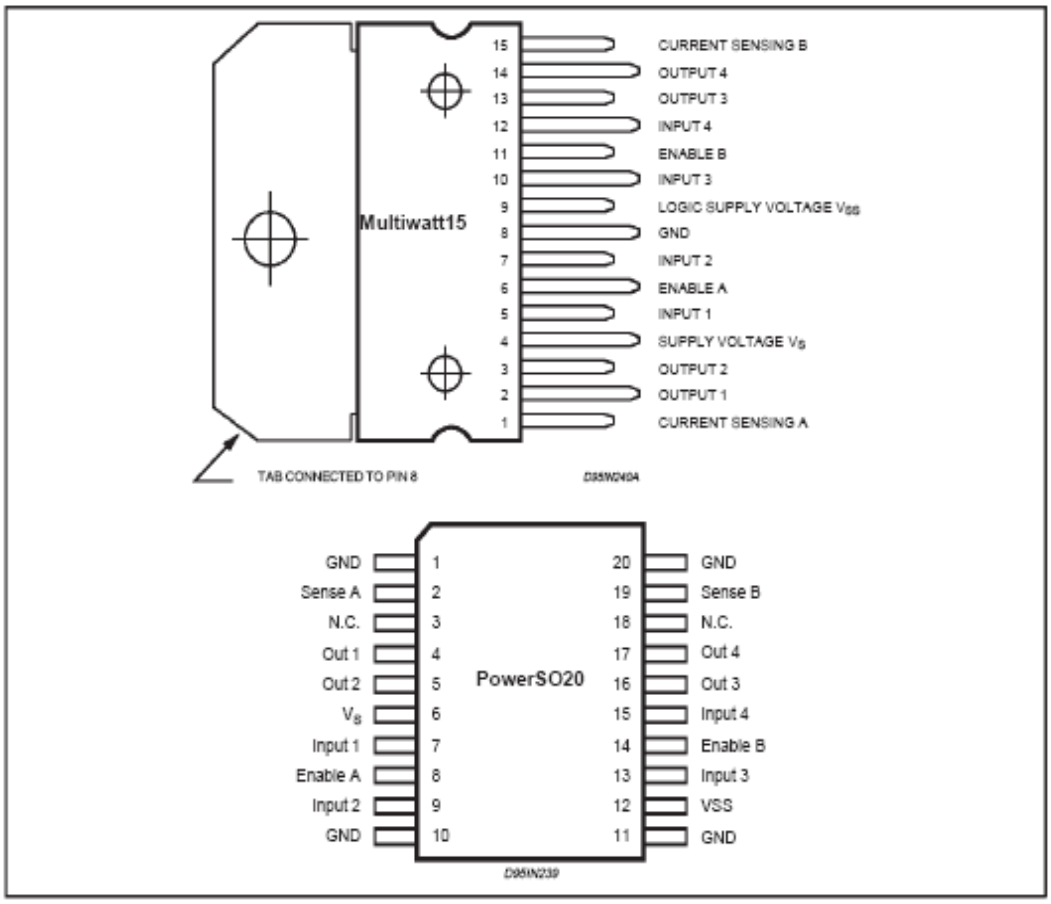


## THERMAL DATA

| Symbol | Parameter | | PowerSO20 | Multiwatt15 | Unit |
|---|---|---|---|---|---|
| $R_{th\ j\text{-}case}$ | Thermal Resistance Junction-case | Max. | – | 3 | °C/W |
| $R_{th\ j\text{-}amb}$ | Thermal Resistance Junction-ambient | Max. | 13 (*) | 35 | °C/W |

(*) Mounted on aluminum substrate

**PIN FUNCTIONS** (refer to the block diagram)

| MW.15 | PowerSO | Name | Function |
|---|---|---|---|
| 1;15 | 2;19 | Sense A; Sense B | Between this pin and ground is connected the sense resistor to control the current of the load. |
| 2;3 | 4;5 | Out 1; Out 2 | Outputs of the Bridge A; the current that flows through the load connected between these two pins is monitored at pin 1. |
| 4 | 6 | $V_S$ | Supply Voltage for the Power Output Stages. A non-inductive 100nF capacitor must be connected between this pin and ground. |
| 5;7 | 7;9 | Input 1; Input 2 | TTL Compatible Inputs of the Bridge A. |
| 6;11 | 8;14 | Enable A; Enable B | TTL Compatible Enable Input: the L state disables the bridge A (enable A) and/or the bridge B (enable B). |
| 8 | 1,10,11,20 | GND | Ground. |
| 9 | 12 | VSS | Supply Voltage for the Logic Blocks. A100nF capacitor must be connected between this pin and ground. |
| 10; 12 | 13;15 | Input 3; Input 4 | TTL Compatible Inputs of the Bridge B. |
| 13; 14 | 16;17 | Out 3; Out 4 | Outputs of the Bridge B. The current that flows through the load connected between these two pins is monitored at pin 15. |
| – | 3;18 | N.C. | Not Connected |

**ELECTRICAL CHARACTERISTICS** ($V_S$ = 42V; $V_{SS}$ = 5V, $T_j$ = 25°C; unless otherwise specified)

| Symbol | Parameter | Test Conditions | Min. | Typ. | Max. | Unit |
|---|---|---|---|---|---|---|
| $V_S$ | Supply Voltage (pin 4) | Operative Condition | $V_{IH}$ +2.5 | | 46 | V |
| $V_{SS}$ | Logic Supply Voltage (pin 9) | | 4.5 | 5 | 7 | V |
| $I_S$ | Quiescent Supply Current (pin 4) | $V_{en}$ = H; $I_L$ = 0 $V_i$ = L<br>$V_i$ = H | | 13<br>50 | 22<br>70 | mA<br>mA |
| | | $V_{en}$ = L $V_i$ = X | | | 4 | mA |
| $I_{SS}$ | Quiescent Current from $V_{SS}$ (pin 9) | $V_{en}$ = H; $I_L$ = 0 $V_i$ = L<br>$V_i$ = H | | 24<br>7 | 36<br>12 | mA<br>mA |
| | | $V_{en}$ = L $V_i$ = X | | | 6 | mA |
| $V_{IL}$ | Input Low Voltage (pins 5, 7, 10, 12) | | –0.3 | | 1.5 | V |
| $V_{IH}$ | Input High Voltage (pins 5, 7, 10, 12) | | 2.3 | | VSS | V |
| $I_{IL}$ | Low Voltage Input Current (pins 5, 7, 10, 12) | $V_i$ = L | | | –10 | µA |
| $I_{IH}$ | High Voltage Input Current (pins 5, 7, 10, 12) | Vi = H ≤ $V_{SS}$ –0.6V | | 30 | 100 | µA |
| $V_{en}$ = L | Enable Low Voltage (pins 6, 11) | | –0.3 | | 1.5 | V |
| $V_{en}$ = H | Enable High Voltage (pins 6, 11) | | 2.3 | | $V_{SS}$ | V |
| $I_{en}$ = L | Low Voltage Enable Current (pins 6, 11) | $V_{en}$ = L | | | –10 | µA |
| $I_{en}$ = H | High Voltage Enable Current (pins 6, 11) | $V_{en}$ = H ≤ $V_{SS}$ –0.6V | | 30 | 100 | µA |
| $V_{CEsat(H)}$ | Source Saturation Voltage | $I_L$ = 1A<br>$I_L$ = 2A | 0.95 | 1.35<br>2 | 1.7<br>2.7 | V<br>V |
| $V_{CEsat(L)}$ | Sink Saturation Voltage | $I_L$ = 1A (5)<br>$I_L$ = 2A (5) | 0.85 | 1.2<br>1.7 | 1.6<br>2.3 | V<br>V |
| $V_{CEsat}$ | Total Drop | $I_L$ = 1A (5)<br>$I_L$ = 2A (5) | 1.80 | | 3.2<br>4.9 | V<br>V |
| $V_{sens}$ | Sensing Voltage (pins 1, 15) | | –1 (1) | | 2 | V |

## ELECTRICAL CHARACTERISTICS (continued)

| Symbol | Parameter | Test Conditions | Min. | Typ. | Max. | Unit |
|---|---|---|---|---|---|---|
| $T_1$ ($V_i$) | Source Current Turn-off Delay | 0.5 $V_i$ to 0.9 $I_L$ (2); (4) | | 1.5 | | µs |
| $T_2$ ($V_i$) | Source Current Fall Time | 0.9 $I_L$ to 0.1 $I_L$ (2); (4) | | 0.2 | | µs |
| $T_3$ ($V_i$) | Source Current Turn-on Delay | 0.5 $V_i$ to 0.1 $I_L$ (2); (4) | | 2 | | µs |
| $T_4$ ($V_i$) | Source Current Rise Time | 0.1 $I_L$ to 0.9 $I_L$ (2); (4) | | 0.7 | | µs |
| $T_5$ ($V_i$) | Sink Current Turn-off Delay | 0.5 $V_i$ to 0.9 $I_L$ (3); (4) | | 0.7 | | µs |
| $T_6$ ($V_i$) | Sink Current Fall Time | 0.9 $I_L$ to 0.1 $I_L$ (3); (4) | | 0.25 | | µs |
| $T_7$ ($V_i$) | Sink Current Turn-on Delay | 0.5 $V_i$ to 0.9 $I_L$ (3); (4) | | 1.6 | | µs |
| $T_8$ ($V_i$) | Sink Current Rise Time | 0.1 $I_L$ to 0.9 $I_L$ (3); (4) | | 0.2 | | µs |
| fc ($V_i$) | Commutation Frequency | $I_L$ = 2A | | 25 | 40 | KHz |
| $T_1$ ($V_{en}$) | Source Current Turn-off Delay | 0.5 $V_{en}$ to 0.9 $I_L$ (2); (4) | | 3 | | µs |
| $T_2$ ($V_{en}$) | Source Current Fall Time | 0.9 $I_L$ to 0.1 $I_L$ (2); (4) | | 1 | | µs |
| $T_3$ ($V_{en}$) | Source Current Turn-on Delay | 0.5 $V_{en}$ to 0.1 $I_L$ (2); (4) | | 0.3 | | µs |
| $T_4$ ($V_{en}$) | Source Current Rise Time | 0.1 $I_L$ to 0.9 $I_L$ (2); (4) | | 0.4 | | µs |
| $T_5$ ($V_{en}$) | Sink Current Turn-off Delay | 0.5 $V_{en}$ to 0.9 $I_L$ (3); (4) | | 2.2 | | µs |
| $T_6$ ($V_{en}$) | Sink Current Fall Time | 0.9 $I_L$ to 0.1 $I_L$ (3); (4) | | 0.35 | | µs |
| $T_7$ ($V_{en}$) | Sink Current Turn-on Delay | 0.5 $V_{en}$ to 0.9 $I_L$ (3); (4) | | 0.25 | | µs |
| $T_8$ ($V_{en}$) | Sink Current Rise Time | 0.1 $I_L$ to 0.9 $I_L$ (3); (4) | | 0.1 | | µs |

1) 1)Sensing voltage can be –1 V for t ≤ 50 µsec; in steady state $V_{sens}$ min ≥ –0.5 V.
2) See fig. 2.
3) See fig. 4.
4) The load must be a pure resistor.

**Figure 1 :** Typical Saturation Voltage vs. Output Current.

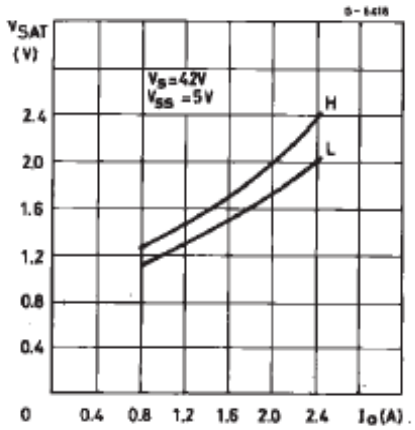


**Figure 2 :** Switching Times Test Circuits.

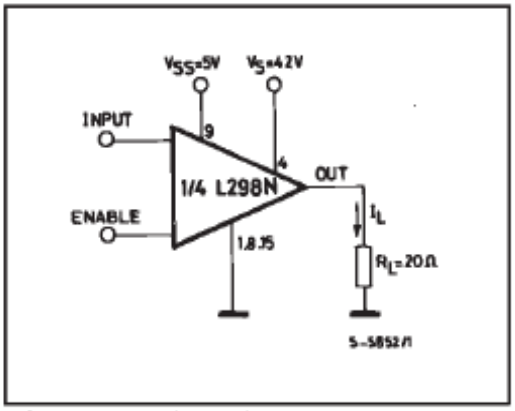


Note : For INPUT Switching, set EN = H
For ENABLE Switching, set IN = H

Figure 3 : Source Current Delay Times vs. Input or Enable Switching.

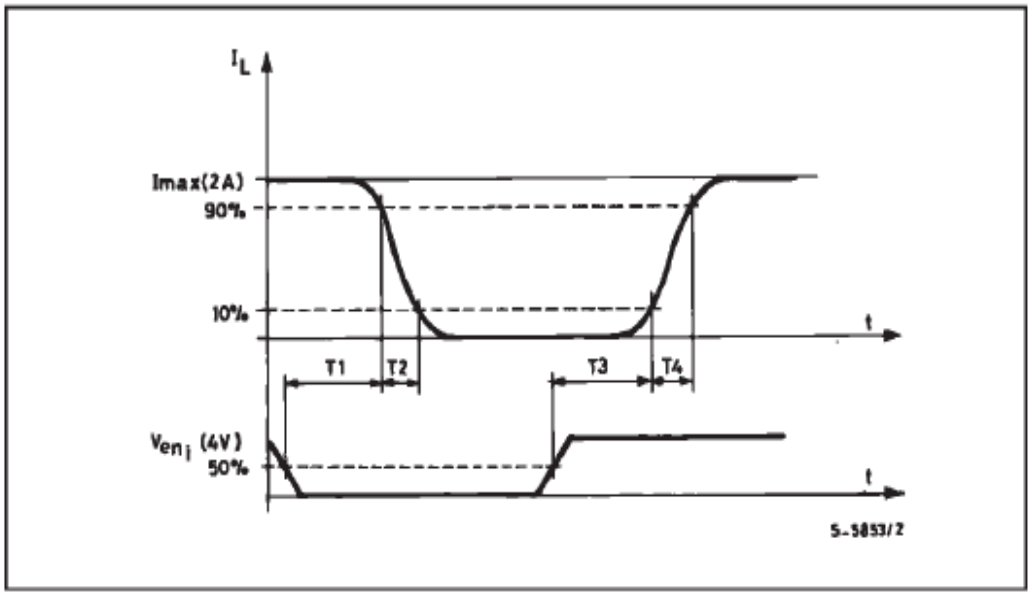


Figure 4 : Switching Times Test Circuits.

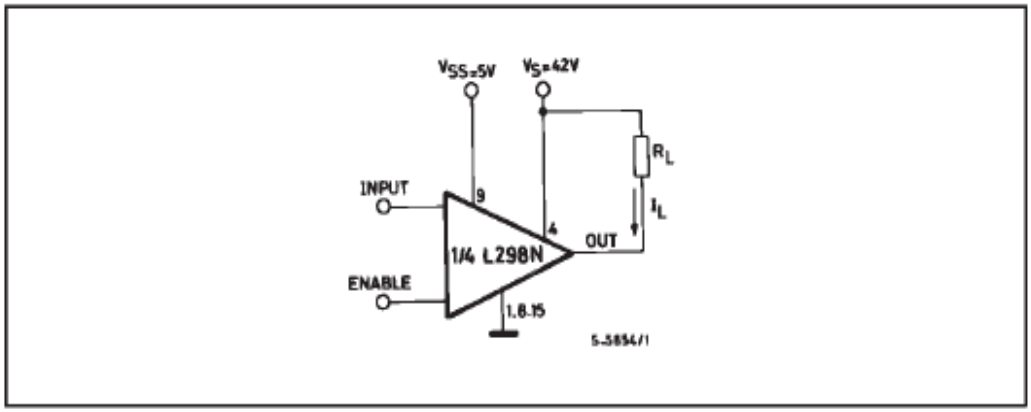


Note : For INPUT Switching, set EN = H
For ENABLE Switching, set IN = L

**Figure 5 :** Sink Current Delay Times vs. Input 0 V Enable Switching.

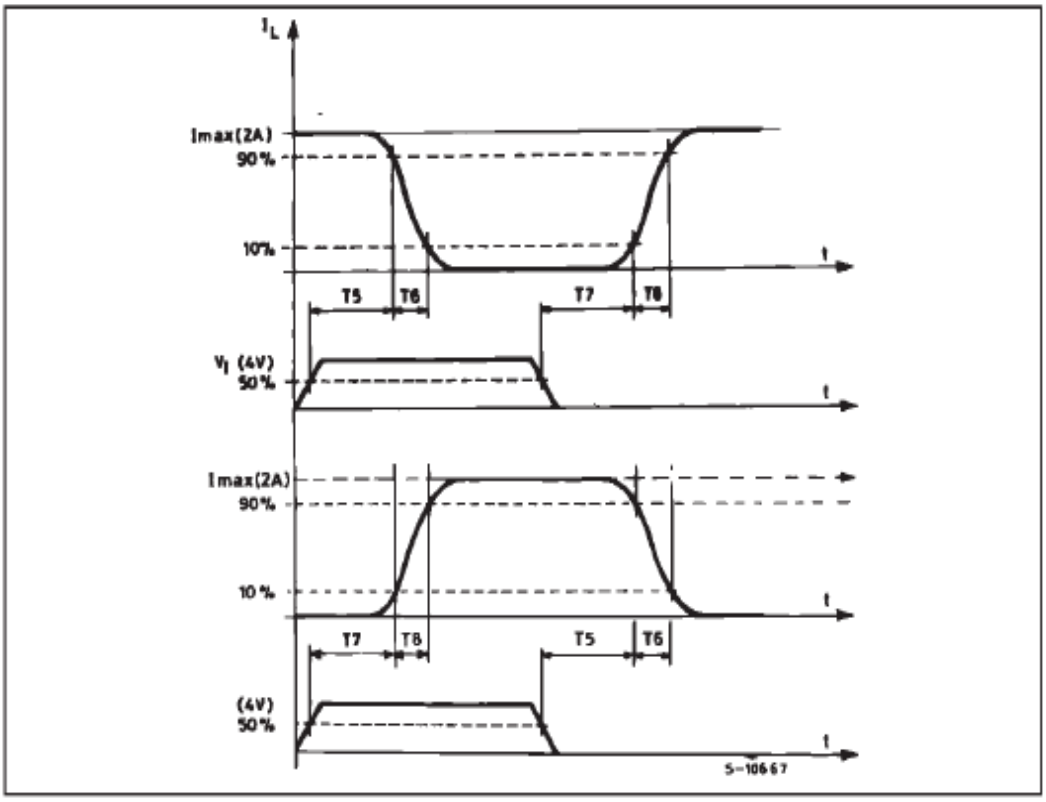


**Figure 6 :** Bidirectional DC Motor Control.

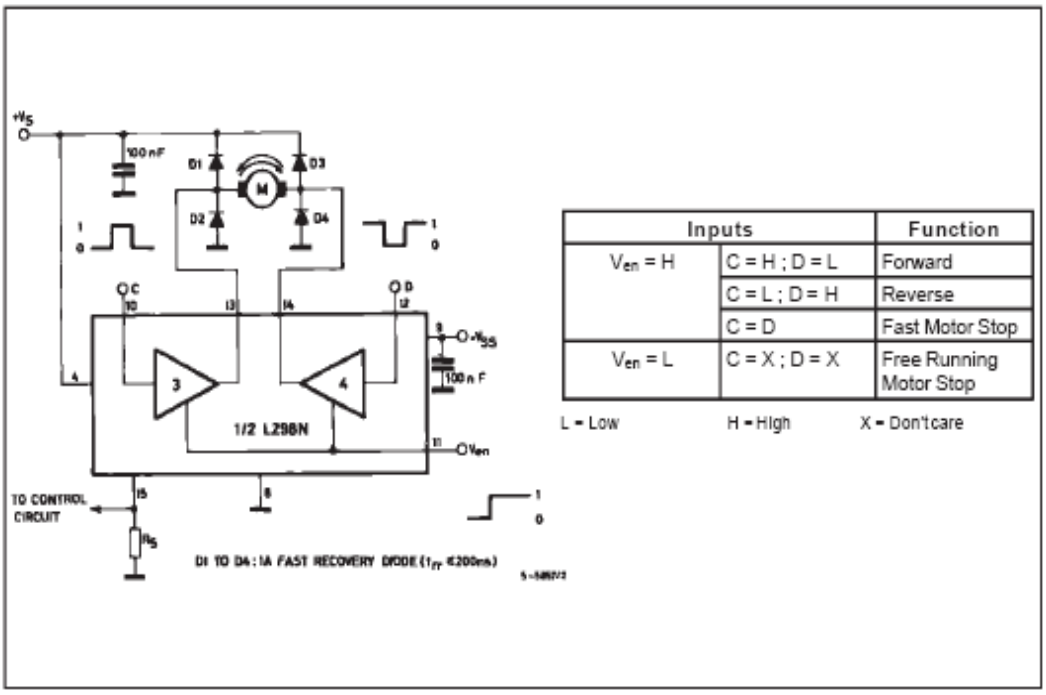


| Inputs | | Function |
|---|---|---|
| $V_{en}$ = H | C = H ; D = L | Forward |
| | C = L ; D = H | Reverse |
| | C = D | Fast Motor Stop |
| $V_{en}$ = L | C = X ; D = X | Free Running Motor Stop |

L = Low H = High X = Don't care

**Figure 7 :** For higher currents, outputs can be paralleled. Take care to parallel channel 1 with channel 4 and channel 2 with channel 3.

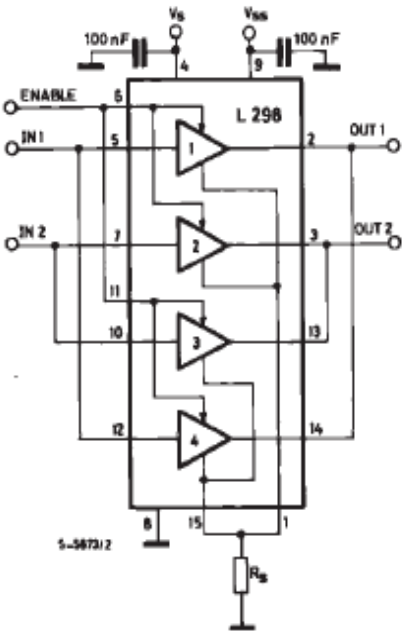


## APPLICATION INFORMATION (Refer to the block diagram)

### 1.1. POWER OUTPUT STAGE

The L298 integrates two power output stages (A ; B). The power output stage is a bridge configuration and its outputs can drive an inductive load in common or differenzial mode, depending on the state of the inputs. The current that flows through the load comes out from the bridge at the sense output : an external resistor ($R_{SA}$ ; $R_{SB}$.) allows to detect the intensity of this current.

### 1.2. INPUT STAGE

Each bridge is driven by means of four gates the input of which are In1 ; In2 ; EnA and In3 ; In4 ; EnB. The In inputs set the bridge state when The En input is high ; a low state of the En input inhibits the bridge. All the inputs are TTL compatible.

### 2. SUGGESTIONS

A non inductive capacitor, usually of 100 nF, must be foreseen between both Vs and Vss, to ground, as near as possible to GND pin. When the large capacitor of the power supply is too far from the IC, a second smaller one must be foreseen near the L298.

The sense resistor, not of a wire wound type, must be grounded near the negative pole of Vs that must be near the GND pin of the I.C.

Each input must be connected to the source of the driving signals by means of a very short path.

Turn-On and Turn-Off : Before to Turn-ON the Supply Voltage and before to Turn it OFF, the Enable input must be driven to the Low state.

### 3. APPLICATIONS

Fig 6 shows a bidirectional DC motor control Schematic Diagram for which only one bridge is needed. The external bridge of diodes D1 to D4 is made by four fast recovery elements (trr ≤ 200 nsec) that must be chosen of a VF as low as possible at the worst case of the load current.

The sense output voltage can be used to control the current amplitude by chopping the inputs, or to provide overcurrent protection by switching low the enable input.

The brake function (Fast motor stop) requires that the Absolute Maximum Rating of 2 Amps must never be overcome.

When the repetitive peak current needed from the load is higher than 2 Amps, a paralleled configuration can be chosen (See Fig.7).

An external bridge of diodes are required when inductive loads are driven and when the inputs of the IC are chopped; Shottky diodes would be preferred.

This solution can drive until 3 Amps In DC operation and until 3.5 Amps of a repetitive peak current.

On Fig 8 it is shown the driving of a two phase bipolar stepper motor ; the needed signals to drive the inputs of the L298 are generated, in this example, from the IC L297.

Fig 9 shows an example of P.C.B. designed for the application of Fig 8.

Fig 10 shows a second two phase bipolar stepper motor control circuit where the current is controlled by the I.C. L6506.

**Figure 8 :** Two Phase Bipolar Stepper Motor Circuit.

This circuit drives bipolar stepper motors with winding currents up to 2 A. The diodes are fast 2 A types.

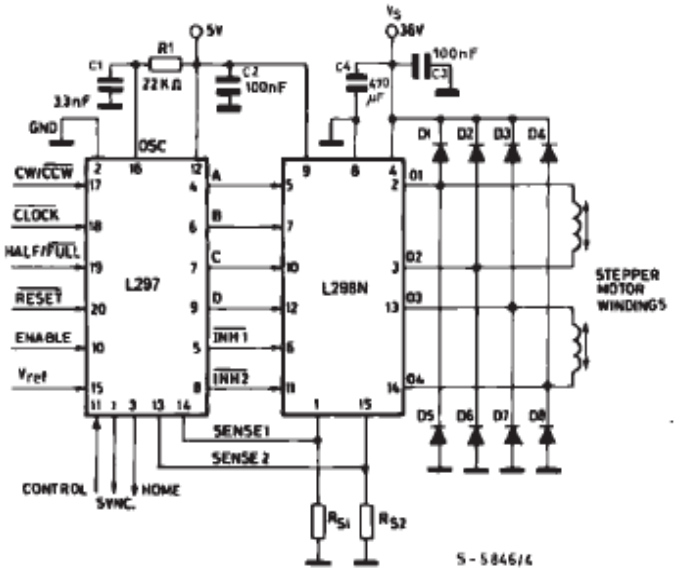


$R_{S1} = R_{S2} = 0.5\,\Omega$

D1 to D8 = 2 A Fast diodes { $V_F \leq 1.2$ V @ I = 2 A; trr ≤ 200 ns }

**Figure 9 :** Suggested Printed Circuit Board Layout for the Circuit of fig. 8 (1:1 scale).

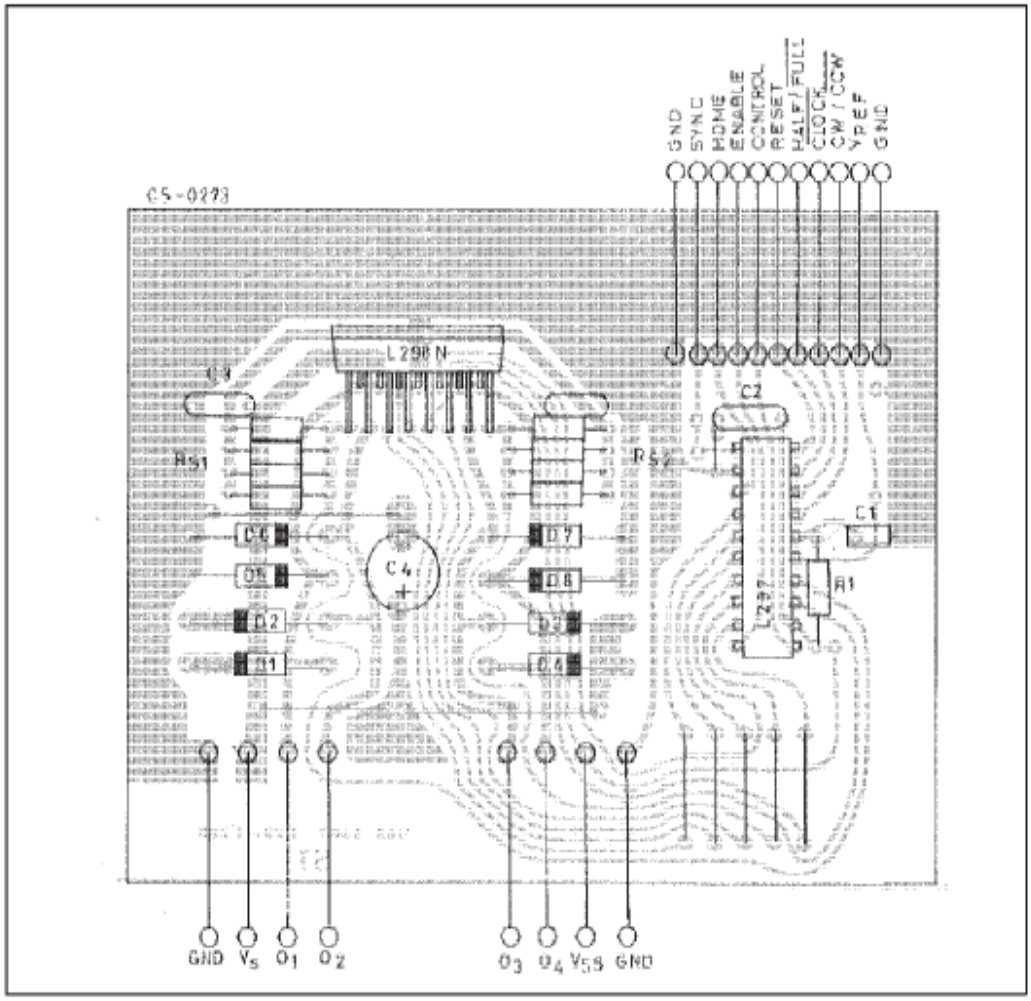


**Figure 10 :** Two Phase Bipolar Stepper Motor Control Circuit by Using the Current Controller L6506.

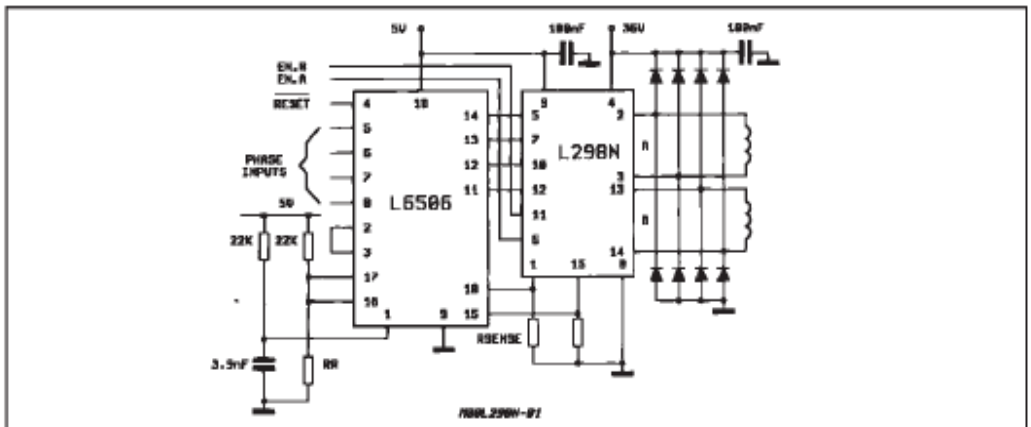


$R_R$ and $R_{sense}$ depend from the load current

| DIM. | mm | | | inch | | |
|---|---|---|---|---|---|---|
| | MIN. | TYP. | MAX. | MIN. | TYP. | MAX. |
| A | | | 5 | | | 0.197 |
| B | | | 2.65 | | | 0.104 |
| C | | | 1.6 | | | 0.063 |
| D | | 1 | | | 0.039 | |
| E | 0.49 | | 0.55 | 0.019 | | 0.022 |
| F | 0.66 | | 0.75 | 0.026 | | 0.030 |
| G | 1.02 | 1.27 | 1.52 | 0.040 | 0.050 | 0.060 |
| G1 | 17.53 | 17.78 | 18.03 | 0.690 | 0.700 | 0.710 |
| H1 | 19.6 | | | 0.772 | | |
| H2 | | | 20.2 | | | 0.795 |
| L | 21.9 | 22.2 | 22.5 | 0.862 | 0.874 | 0.886 |
| L1 | 21.7 | 22.1 | 22.5 | 0.854 | 0.870 | 0.886 |
| L2 | 17.65 | | 18.1 | 0.695 | | 0.713 |
| L3 | 17.25 | 17.5 | 17.75 | 0.679 | 0.689 | 0.699 |
| L4 | 10.3 | 10.7 | 10.9 | 0.406 | 0.421 | 0.429 |
| L7 | 2.65 | | 2.9 | 0.104 | | 0.114 |
| M | 4.25 | 4.55 | 4.85 | 0.167 | 0.179 | 0.191 |
| M1 | 4.63 | 5.08 | 5.53 | 0.182 | 0.200 | 0.218 |
| S | 1.9 | | 2.6 | 0.075 | | 0.102 |
| S1 | 1.9 | | 2.6 | 0.075 | | 0.102 |
| Dia1 | 3.65 | | 3.85 | 0.144 | | 0.152 |

**OUTLINE AND MECHANICAL DATA**

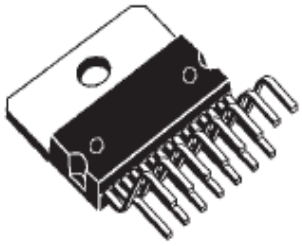

**Multiwatt15 V**

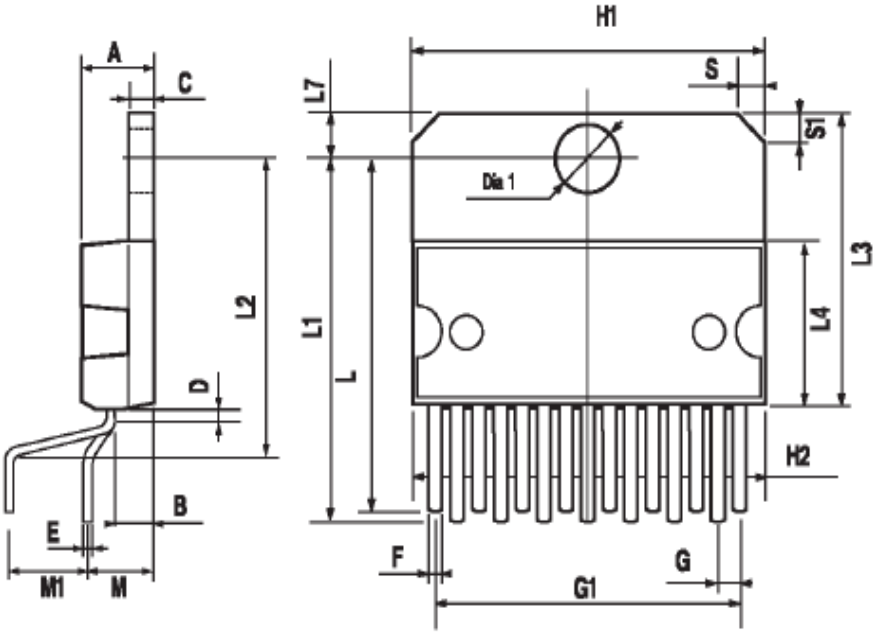

| DIM. | mm | | | inch | | |
|---|---|---|---|---|---|---|
| | MIN. | TYP. | MAX. | MIN. | TYP. | MAX. |
| A | | | 5 | | | 0.197 |
| B | | | 2.65 | | | 0.104 |
| C | | | 1.6 | | | 0.063 |
| E | 0.49 | | 0.55 | 0.019 | | 0.022 |
| F | 0.66 | | 0.75 | 0.026 | | 0.030 |
| G | 1.14 | 1.27 | 1.4 | 0.045 | 0.050 | 0.055 |
| G1 | 17.57 | 17.78 | 17.91 | 0.692 | 0.700 | 0.705 |
| H1 | 19.6 | | | 0.772 | | |
| H2 | | | 20.2 | | | 0.795 |
| L | | 20.57 | | | 0.810 | |
| L1 | | 18.03 | | | 0.710 | |
| L2 | | 2.54 | | | 0.100 | |
| L3 | 17.25 | 17.5 | 17.75 | 0.679 | 0.689 | 0.699 |
| L4 | 10.3 | 10.7 | 10.9 | 0.406 | 0.421 | 0.429 |
| L5 | | 5.28 | | | 0.208 | |
| L6 | | 2.38 | | | 0.094 | |
| L7 | 2.65 | | 2.9 | 0.104 | | 0.114 |
| S | 1.9 | | 2.6 | 0.075 | | 0.102 |
| S1 | 1.9 | | 2.6 | 0.075 | | 0.102 |
| Dia1 | 3.65 | | 3.85 | 0.144 | | 0.152 |

**OUTLINE AND MECHANICAL DATA**

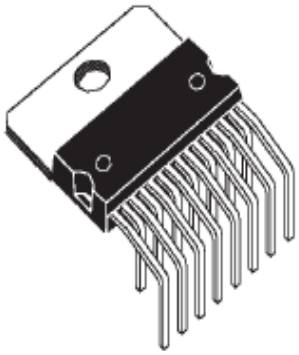

**Multiwatt15 H**

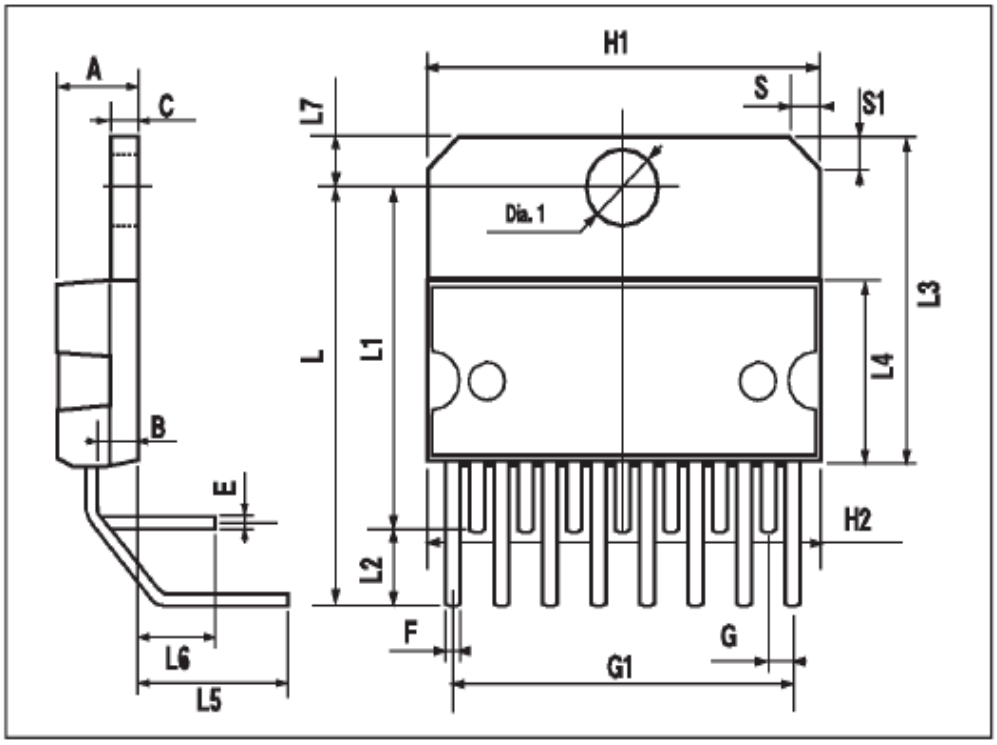

| DIM. | mm | | | inch | | |
|---|---|---|---|---|---|---|
| | MIN. | TYP. | MAX. | MIN. | TYP. | MAX. |
| A | | | 3.6 | | | 0.142 |
| a1 | 0.1 | | 0.3 | 0.004 | | 0.012 |
| a2 | | | 3.3 | | | 0.130 |
| a3 | 0 | | 0.1 | 0.000 | | 0.004 |
| b | 0.4 | | 0.53 | 0.016 | | 0.021 |
| c | 0.23 | | 0.32 | 0.009 | | 0.013 |
| D (1) | 15.8 | | 16 | 0.622 | | 0.630 |
| D1 | 9.4 | | 9.8 | 0.370 | | 0.386 |
| E | 13.9 | | 14.5 | 0.547 | | 0.570 |
| e | | 1.27 | | | 0.050 | |
| e3 | | 11.43 | | | 0.450 | |
| E1 (1) | 10.9 | | 11.1 | 0.429 | | 0.437 |
| E2 | | | 2.9 | | | 0.114 |
| E3 | 5.8 | | 6.2 | 0.228 | | 0.244 |
| G | 0 | | 0.1 | 0.000 | | 0.004 |
| H | 15.5 | | 15.9 | 0.610 | | 0.626 |
| h | | | 1.1 | | | 0.043 |
| L | 0.8 | | 1.1 | 0.031 | | 0.043 |
| N | 10° (max.) | | | | | |
| S | 8° (max.) | | | | | |
| T | | 10 | | | 0.394 | |

(1) "D and F" do not include mold flash or protrusions.
- Mold flash or protrusions shall not exceed 0.15 mm (0.006").
- Critical dimensions: "E", "G" and "a3"

## OUTLINE AND MECHANICAL DATA

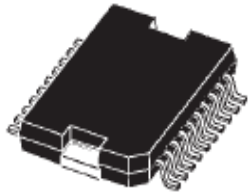

JEDEC MO-166

## PowerSO20