LAMPIRAN A
LIST PROGRAM SENSOR

PROGRAM PADA MIKROKONTROLER AVR ATMega 16

```
/*****************************************************
This program was produced by the
CodeWizardAVR V1.25.3 Professional
Automatic Program Generator
© Copyright 1998-2007 Pavel Haiduc, HP InfoTech s.r.l.
http://www.hpinfotech.com

Project :
Version :
Date    : 7/16/2008
Author  : mond
Company : mond
Comments:


Chip type           : ATmega16
Program type        : Application
Clock frequency     : 12.000000 MHz
Memory model        : Small
External SRAM size  : 0
Data Stack size     : 256
*****************************************************/

#include <mega16.h>
#include <delay.h>
long int temp;

#define RXB8 1
#define TXB8 0
#define UPE 2
#define OVR 3
#define FE 4
#define UDRE 5
#define RXC 7

#define FRAMING_ERROR (1<<FE)
#define PARITY_ERROR (1<<UPE)
#define DATA_OVERRUN (1<<OVR)
#define DATA_REGISTER_EMPTY (1<<UDRE)
#define RX_COMPLETE (1<<RXC)

// USART Receiver buffer
#define RX_BUFFER_SIZE 8
char rx_buffer[RX_BUFFER_SIZE];
```

```
#if RX_BUFFER_SIZE<256
unsigned char rx_wr_index,rx_rd_index,rx_counter;
#else
unsigned int rx_wr_index,rx_rd_index,rx_counter;
#endif

// This flag is set on USART Receiver buffer overflow
bit rx_buffer_overflow;

// USART Receiver interrupt service routine
interrupt [USART_RXC] void usart_rx_isr(void)
{
char status,data;
status=UCSRA;
data=UDR;
if ((status & (FRAMING_ERROR | PARITY_ERROR | DATA_OVERRUN))==0)
   {
   rx_buffer[rx_wr_index]=data;
   if (++rx_wr_index == RX_BUFFER_SIZE) rx_wr_index=0;
   if (++rx_counter == RX_BUFFER_SIZE)
      {
      rx_counter=0;
      rx_buffer_overflow=1;
      };
   };

}

#ifndef _DEBUG_TERMINAL_IO_
// Get a character from the USART Receiver buffer
#define _ALTERNATE_GETCHAR_
#pragma used+
char getchar(void)
{
char data;
while (rx_counter==0);
data=rx_buffer[rx_rd_index];
if (++rx_rd_index == RX_BUFFER_SIZE) rx_rd_index=0;
#asm("cli")
--rx_counter;
#asm("sei")
return data;
}
#pragma used-
#endif
```

```
// USART Transmitter buffer
#define TX_BUFFER_SIZE 8
char tx_buffer[TX_BUFFER_SIZE];

#if TX_BUFFER_SIZE<256
unsigned char tx_wr_index,tx_rd_index,tx_counter;
#else
unsigned int tx_wr_index,tx_rd_index,tx_counter;
#endif

// USART Transmitter interrupt service routine
interrupt [USART_TXC] void usart_tx_isr(void)
{
if (tx_counter)
   {
   --tx_counter;
   UDR=tx_buffer[tx_rd_index];
   if (++tx_rd_index == TX_BUFFER_SIZE) tx_rd_index=0;
   };
}

#ifndef _DEBUG_TERMINAL_IO_
// Write a character to the USART Transmitter buffer
#define _ALTERNATE_PUTCHAR_
#pragma used+
void putchar(char c)
{
while (tx_counter == TX_BUFFER_SIZE);
#asm("cli")
if (tx_counter || ((UCSRA & DATA_REGISTER_EMPTY)==0))
   {
   tx_buffer[tx_wr_index]=c;
   if (++tx_wr_index == TX_BUFFER_SIZE) tx_wr_index=0;
   ++tx_counter;
   }
else
   UDR=c;
#asm("sei")
}
#pragma used-
#endif

// Standard Input/Output functions
#include <stdio.h>

#define ADC_VREF_TYPE 0x40
```

```
// Read the AD conversion result
unsigned int read_adc(unsigned char adc_input)
{
ADMUX=adc_input | (ADC_VREF_TYPE & 0xff);
// Start the AD conversion
ADCSRA|=0x40;
// Wait for the AD conversion to complete
while ((ADCSRA & 0x10)==0);
ADCSRA|=0x10;
return ADCW;
}

// Declare your global variables here

int_CHECK1 ;
int_CHECK2 ;
int_RPM1 ;
int_RPM2 ;
int_SUHU1 ;
int_SUHU2 ;
int_VIBRASI ;
int_ARUS ;
int_DELAY;
int_COUNTER1 ;
int_COUNTER2;
void main(void)
{
// Declare your local variables here

// Input/Output Ports initialization
// Port A initialization
// Func7=In Func6=In Func5=In Func4=In Func3=In Func2=In Func1=In Func0=In
// State7=T State6=T State5=T State4=T State3=T State2=T State1=T State0=T
PORTA=0x00;
DDRA=0x00;

// Port B initialization
// Func7=In Func6=In Func5=In Func4=In Func3=In Func2=In Func1=In Func0=In
// State7=T State6=T State5=T State4=T State3=T State2=T State1=T State0=T
PORTB=0x00;
DDRB=0x00;

// Port C initialization
// Func7=In Func6=In Func5=In Func4=In Func3=In Func2=In Func1=In Func0=In
// State7=T State6=T State5=T State4=T State3=T State2=T State1=T State0=T
```

```
PORTC=0x00;
DDRC=0x00;

// Port D initialization
// Func7=In Func6=In Func5=In Func4=In Func3=In Func2=In Func1=In Func0=In
// State7=T State6=T State5=T State4=T State3=T State2=T State1=T State0=T
PORTD=0x00;
DDRD=0x00;

// Timer/Counter 0 initialization
// Clock source: System Clock
// Clock value: Timer 0 Stopped
// Mode: Normal top=FFh
// OC0 output: Disconnected
TCCR0=0x00;
TCNT0=0x00;
OCR0=0x00;

// Timer/Counter 1 initialization
// Clock source: System Clock
// Clock value: Timer 1 Stopped
// Mode: Normal top=FFFFh
// OC1A output: Discon.
// OC1B output: Discon.
// Noise Canceler: Off
// Input Capture on Falling Edge
// Timer 1 Overflow Interrupt: Off
// Input Capture Interrupt: Off
// Compare A Match Interrupt: Off
// Compare B Match Interrupt: Off
TCCR1A=0x00;
TCCR1B=0x00;
TCNT1H=0x00;
TCNT1L=0x00;
ICR1H=0x00;
ICR1L=0x00;
OCR1AH=0x00;
OCR1AL=0x00;
OCR1BH=0x00;
OCR1BL=0x00;

// Timer/Counter 2 initialization
// Clock source: System Clock
// Clock value: Timer 2 Stopped
// Mode: Normal top=FFh
// OC2 output: Disconnected
```

```
ASSR=0x00;
TCCR2=0x00;
TCNT2=0x00;
OCR2=0x00;

// External Interrupt(s) initialization
// INT0: Off
// INT1: Off
// INT2: Off
MCUCR=0x00;
MCUCSR=0x00;

// Timer(s)/Counter(s) Interrupt(s) initialization
TIMSK=0x00;

// USART initialization
// Communication Parameters: 8 Data, 1 Stop, No Parity
// USART Receiver: On
// USART Transmitter: On
// USART Mode: Asynchronous
// USART Baud rate: 9600
UCSRA=0x00;
UCSRB=0xD8;
UCSRC=0x86;
UBRRH=0x00;
UBRRL=0x4D;

// Analog Comparator initialization
// Analog Comparator: Off
// Analog Comparator Input Capture by Timer/Counter 1: Off
ACSR=0x80;
SFIOR=0x00;

// ADC initialization
// ADC Clock frequency: 750.000 kHz
// ADC Voltage Reference: AVCC pin
// ADC Auto Trigger Source: None
ADMUX=ADC_VREF_TYPE & 0xff;
ADCSRA=0x84;

// Global enable interrupts
#asm("sei")

_CHECK1 = 0;
_CHECK2 = 0;
_RPM1 = 0;
```

```
_RPM2 = 0;
_SUHU1 = 0;
_SUHU2 = 0;
_VIBRASI = 0;
_ARUS = 0;_
_COUNTER1 = 0;
_COUNTER2 = 0;

// Delay pengiriman data ( dalam ms )
_DELAY = 100;

while (1)
    {
    // Place your code here
//SENSOR SUHU
//suhu_1
    temp=read_adc(0);
    temp=(temp*5000/1024);
    temp=temp/10;
    temp=_SUHU1;
    printf("Suhu_1: %5u",_SUHU1);
    delay_ms(500);

//suhu_2
    temp=read_adc(1);
    temp=temp*5000/1024;
    temp=temp/10;
    temp=_SUHU2;
    printf("Suhu_2: %5u",_SUHU2);
    delay_ms(500);
//==============================================================
// SENSOR KECEPATAN
//kecepatan_1
        temp = read_adc(2);
        //printf("TEMP : %d \n",temp);

        if (temp > 600)
        {
            if (_CHECK1 > 0)
            {
                goto keluar_1;
            }
            _COUNTER1 ++;
            _CHECK1 ++;
        }
        else
```

```
            {
                _CHECK1 = 0;
            }

            _COUNTER1=RPM1;
            keluar_1:

            printf("RPM_1 : %d \n",_RPM1);
            delay_ms(500);

//kecepatan_2
            temp = read_adc(3);
            //printf("TEMP : %d \n",temp);

            if (temp > 600)
            {
                if (_CHECK2 > 0)
                {
                    goto keluar_2;
                }
                _COUNTER2 ++;
                _CHECK2 ++;
            }
            else
            {
                _CHECK2 = 0;
            }

            _COUNTER2=RPM2;
            keluar_2:

            printf("RPM_1 : %d \n",_RPM2);
            delay_ms(500);

//==============================================================
//SENSOR ARUS
    temp=read_adc(5);
    temp=temp*5/1024;
    temp=_ARUS;
    printf("Arus: %5u",_ARUS);
    delay_ms(500);

//==============================================================
//SENSOR GETARAN
    temp=read_adc(7);
    temp=temp*5/1024;
```

```
    temp=_VIBRASI;
    printf("Getar: %5u",_VIBRASI);
    delay_ms(500);

//==============================================================
//Pengiriman data dengan USART

        printf("^%d#",_RPM1);
        printf("%d#",_RPM2);
        printf("%d#",_SUHU1);
        printf("%d#",_SUHU2);
        printf("%d#",_ARUS);
        printf("%d^",_VIBRASI);
    delay_ms(_DELAY);
    };
}
```

PROGRAM PADA VISUAL BASIC SEBAGAI TAMPILAN PADA PC

```
Private Sub cmd_EXIT_Click()
   Unload Me
End Sub

Private Sub cmd_START_Click()

   If cmd_START.Caption = "Start" Then
      tmr_UPDATE.Enabled = True
      cmd_START.Caption = "Stop"
   Else
      tmr_UPDATE.Enabled = False
      cmd_START.Caption = "Start"
   End If
End Sub

Private Sub Form_Load()

   chr_VIBRASI.ColumnCount = 1
   chr_ARUS.ColumnCount = 1

   chr_SUHU1.ColumnCount = 1
   chr_SUHU2.ColumnCount = 1

   chr_KECEPATAN1.ColumnCount = 1
   chr_KECEPATAN2.ColumnCount = 1

   Communication.CommPort = 1
   Communication.PortOpen = True
   tmr_UPDATE.Enabled = False

   COUNTER = 0
End Sub

Private Sub tmr_UPDATE_Timer()

   COUNTER = COUNTER + 1

   DATAx = Communication.Input
   DATAx = Split(DATAx, "#")

   Rx_RPM_1 = DATAx(0)
   Rx_RPM_2 = DATAx(1)
   Rx_SUHU_1 = DATAx(2)
   Rx_SUHU_2 = DATAx(3)
```

```
    Rx_ARUS = DATAx(4)
    Rx_VIBRASI = DATAx(5)

    With chr_KECEPATAN1
        .RowCount = COUNTER
        .Row = COUNTER
        .RowLabel = COUNTER
        .Data = Rx_RPM_1
    End With

    With chr_KECEPATAN2
        .RowCount = COUNTER
        .Row = COUNTER
        .RowLabel = COUNTER
        .Data = Rx_RPM_2
    End With

    With chr_SUHU1
        .RowCount = COUNTER
        .Row = COUNTER
        .RowLabel = COUNTER
        .Data = Rx_SUHU_1
    End With

    With chr_SUHU2
        .RowCount = COUNTER
        .Row = COUNTER
        .RowLabel = COUNTER
        .Data = Rx_SUHU_2
    End With

    With chr_ARUS
        .RowCount = COUNTER
        .Row = COUNTER
        .RowLabel = COUNTER
        .Data = Rx_ARUS

For a = 1 To 8
```

Rumus Interpolasi untuk Sensor Arus

```
        Gi(a - 1) = InputBox("Masukan Arus ke - " & a)

        If (a - 1) = 0 Then
            Vi(0) = Xi(0) + (((Gi(0) - Yi(0)) / (Yi(1) - Yi(0))) * (Xi(1) - Xi(0)))
        ElseIf (a - 1) = 1 Then
            Vi(1) = Xi(0) + (((Gi(1) - Yi(0)) / (Yi(1) - Yi(0))) * (Xi(1) - Xi(0)))
```

```
        ElseIf (a - 1) = 2 Then
            Vi(2) = Xi(0) + (((Gi(2) - Yi(0)) / (Yi(1) - Yi(0))) * (Xi(1) - Xi(0)))
        ElseIf (a - 1) = 3 Then
            Vi(3) = Xi(0) + (((Gi(3) - Yi(0)) / (Yi(1) - Yi(0))) * (Xi(1) - Xi(0)))
        ElseIf (a - 1) = 4 Then
            Vi(4) = Xi(1) + (((Gi(4) - Yi(1)) / (Yi(2) - Yi(1))) * (Xi(2) - Xi(1)))
        ElseIf (a - 1) = 5 Then
            Vi(5) = Xi(1) + (((Gi(5) - Yi(1)) / (Yi(2) - Yi(1))) * (Xi(2) - Xi(1)))
        ElseIf (a - 1) = 6 Then
            Vi(6) = Xi(1) + (((Gi(6) - Yi(1)) / (Yi(2) - Yi(1))) * (Xi(2) - Xi(1)))
        ElseIf (a - 1) = 7 Then
            Vi(7) = Xi(5) + (((Gi(7) - Yi(5)) / (Yi(6) - Yi(5))) * (Xi(6) - Xi(5)))
        End If

        With chr_ARUS
            .RowCount = a
            .Row = a
            .RowLabel = a
            .Data = Vi(a - 1)
    End With

    With chr_VIBRASI
        .RowCount = COUNTER
        .Row = COUNTER
        .RowLabel = COUNTER
        .Data = Rx_VIBRASI
    End With
End Sub
```

Rumus Interpolasi untuk Sensor Getaran/Vibrasi

```
Next a

    For a = 1 To 5

        G(a - 1) = InputBox("Masukan Vibrasi ke - " & a)

        If (a - 1) = 0 Then
            V(0) = X(0) + (((G(0) - Y(0)) / (Y(1) - Y(0))) * (X(1) - X(0)))
        ElseIf (a - 1) = 1 Then
            V(1) = X(0) + (((G(1) - Y(0)) / (Y(1) - Y(0))) * (X(1) - X(0)))
        ElseIf (a - 1) = 2 Then
            V(2) = X(1) + (((G(2) - Y(1)) / (Y(2) - Y(1))) * (X(2) - X(1)))
        ElseIf (a - 1) = 3 Then
            V(3) = X(2) + (((G(3) - Y(2)) / (Y(3) - Y(2))) * (X(3) - X(2)))
        ElseIf (a - 1) = 4 Then
            V(4) = X(3) + (((G(4) - Y(3)) / (Y(4) - Y(3))) * (X(4) - X(3)))
        End If
```

```
With chr_VIBRASI
        .RowCount = a
        .Row = a
        .RowLabel = a
        .Data = V(a - 1)
    End With

Private Sub Form_Load()

  chr_VIBRASI.ColumnCount = 1
  chr_ARUS.ColumnCount = 1

  chr_SUHU1.ColumnCount = 1
  chr_KECEPATAN1.ColumnCount = 1
  chr_SUHU2.ColumnCount = 1
  chr_KECEPATAN2.ColumnCount = 1

  BANYAK = 10
```

Nilai X dan Y untuk Sensor Getaran/Vibrasi

```
  X(0) = 22
  X(1) = 30
  X(2) = 42
  X(3) = 51
  X(4) = 66

  Y(0) = 0.36
  Y(1) = 0.42
  Y(2) = 0.49
  Y(3) = 0.54
  Y(4) = 0.61
```

Nilai X dan Y untuk Sensor Arus

```
  Xi(0) = 1
  Xi(1) = 1.5
  Xi(2) = 2
  Xi(3) = 2.5
  Xi(4) = 3
  Xi(5) = 3.5
  Xi(6) = 4

  Yi(0) = 0.91
  Yi(1) = 1.04
  Yi(2) = 1.07
  Yi(3) = 1.08
  Yi(4) = 1.1
```

```
    Yi(5) = 1.12
    Yi(6) = 1.15
End Sub
```

LAMPIRAN B
DATASHEET AVR ATMEGA 16

Features

• High-performance, Low-power AVR® 8-bit Microcontroller
• Advanced RISC Architecture
– 131 Powerful Instructions – Most Single-clock Cycle Execution
– 32 x 8 General Purpose Working Registers
– Fully Static Operation
– Up to 16 MIPS Throughput at 16 MHz
– On-chip 2-cycle Multiplier
• High Endurance Non-volatile Memory segments
– 16K Bytes of In-System Self-programmable Flash program memory
– 512 Bytes EEPROM
– 1K Byte Internal SRAM
– Write/Erase Cycles: 10,000 Flash/100,000 EEPROM
– Data retention: 20 years at 85°C/100 years at 25°C(1)
– Optional Boot Code Section with Independent Lock Bits
In-System Programming by On-chip Boot Program
True Read-While-Write Operation
– Programming Lock for Software Security
• JTAG (IEEE std. 1149.1 Compliant) Interface
– Boundary-scan Capabilities According to the JTAG Standard
– Extensive On-chip Debug Support
– Programming of Flash, EEPROM, Fuses, and Lock Bits through the JTAG Interface
• Peripheral Features
– Two 8-bit Timer/Counters with Separate Prescalers and Compare Modes
– One 16-bit Timer/Counter with Separate Prescaler, Compare Mode, and Capture Mode
– Real Time Counter with Separate Oscillator
– Four PWM Channels
– 8-channel, 10-bit ADC
8 Single-ended Channels
7 Differential Channels in TQFP Package Only
2 Differential Channels with Programmable Gain at 1x, 10x, or 200x
– Byte-oriented Two-wire Serial Interface
– Programmable Serial USART
– Master/Slave SPI Serial Interface
– Programmable Watchdog Timer with Separate On-chip Oscillator
– On-chip Analog Comparator
• Special Microcontroller Features
– Power-on Reset and Programmable Brown-out Detection
– Internal Calibrated RC Oscillator
– External and Internal Interrupt Sources
– Six Sleep Modes: Idle, ADC Noise Reduction, Power-save, Power-down, Standby and Extended Standby
• I/O and Packages
– 32 Programmable I/O Lines
– 40-pin PDIP, 44-lead TQFP, and 44-pad QFN/MLF
• Operating Voltages
– 2.7 - 5.5V for ATmega16L
– 4.5 - 5.5V for ATmega16
• Speed Grades
– 0 - 8 MHz for ATmega16L
– 0 - 16 MHz for ATmega16
• Power Consumption @ 1 MHz, 3V, and 25°C for ATmega16L
– Active: 1.1 mA
– Idle Mode: 0.35 mA
– Power-down Mode: < 1 µA

LAMPIRAN C
DATASHEET SENSOR

H21A1 / H21A2 / H21A3

PHOTOTRANSISTOR OPTICAL INTERRUPTER SWITCH

PACKAGE DIMENSIONS

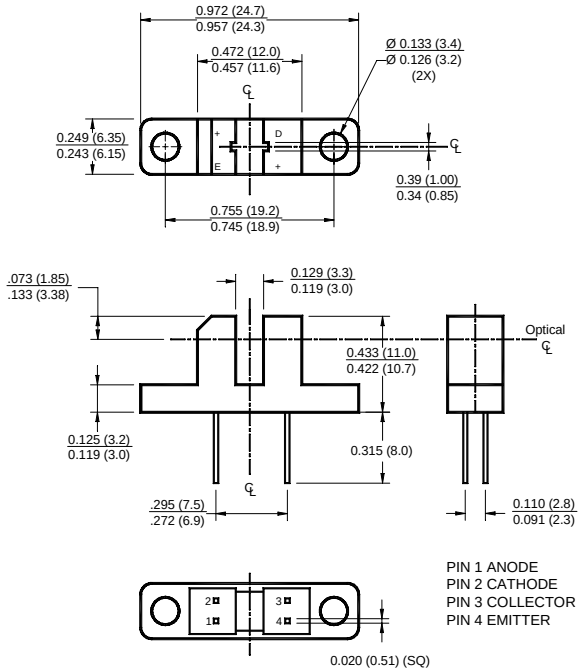

NOTES:

1. Dimensions for all drawings are in inches (mm).
2. Tolerance of ± .010 (.25) on all non-nominal dimensions unless otherwise specified.

DESCRIPTION

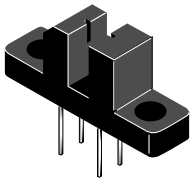

The H21A1, H21A2 and H21A3 consist of a gallium arsenide infrared emitting diode coupled with a silicon phototransistor in a plastic housing. The packaging system is designed to optimize the mechanical resolution, coupling efficiency, ambient light rejection, cost and reliability. The gap in the housing provides a means of interrupting the signal with an opaque material, switching the output from an “ON” to an “OFF” state.

SCHEMATIC

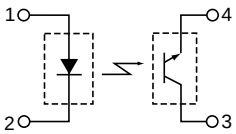

FEATURES

- Opaque housing
- Low cost
- .035” apertures
- High $I_{C(ON)}$

1. Derate power dissipation linearly 1.33 mW/°C above 25°C.
2. RMA flux is recommended.
3. Methanol or isopropyl alcohols are recommended as cleaning agents.
4. Soldering iron tip 1/16” (1.6mm) minimum from housing.

ABSOLUTE MAXIMUM RATINGS (T_A = 25°C unless otherwise specified)

Parameter	Symbol	Rating	Unit
Operating Temperature	T_{OPR}	-55 to +100	°C
Storage Temperature	T_{STG}	-55 to +100	°C
Soldering Temperature (Iron)(2,3 and 4)	T_{SOL-I}	240 for 5 sec	°C
Soldering Temperature (Flow)(2 and 3)	T_{SOL-F}	260 for 10 sec	°C
INPUT (EMITTER) Continuous Forward Current	I_F	50	mA
Reverse Voltage	V_R	6	V
Power Dissipation (1)	P_D	100	mW
OUTPUT (SENSOR) Collector to Emitter Voltage	V_{CEO}	30	V
Emitter to Collector Voltage	V_{ECO}	4.5	V
Collector Current	I_C	20	mA
Power Dissipation (T_C = 25°C)(1)	P_D	150	mW

ELECTRICAL / OPTICAL CHARACTERISTICS (T_A =25°C)(All measurements made under pulse condition)

PARAMETER	TEST CONDITIONS	SYMBOL	DEVICES	MIN	TYP	MAX	UNITS
INPUT (EMITTER) Forward Voltage	I_F = 60 mA	V_F	All	—	—	1.7	V
Reverse Breakdown Voltage	I_R = 10 µA	V_R	All	6.0	—	—	V
Reverse Leakage Current	V_R = 3 V	I_R	All	—	—	1.0	µA
OUTPUT (SENSOR) Emitter to Collector Breakdown	I_F = 100 µA, Ee = 0	BV_{ECO}	All	6.0	—	—	V
Collector to Emitter Breakdown	I_C = 1 mA, Ee = 0	BV_{CEO}	All	30	—	—	V
Collector to Emitter Leakage	V_{CE} = 25 V, Ee = 0	I_{CEO}	All	—	—	100	nA
COUPLED On-State Collector Current	I_F = 5 mA, V_{CE} = 5 V	$I_{C(ON)}$	H21A1	0.15	—	—	mA
			H21A2	0.30	—	—	
			H21A3	0.60	—	—	
	I_F = 20 mA, V_{CE} = 5 V		H21A1	1.0	—	—	
			H21A2	2.0	—	—	
			H21A3	4.0	—	—	
	I_F = 30 mA, V_{CE} = 5 V		H21A1	1.9	—	—	
			H21A2	3.0	—	—	
			H21A3	5.5	—	—	
Saturation Voltage	I_F = 20 mA, I_C = 1.8 mA	$V_{CE(SAT)}$	H21A2/3	—	—	0.40	V
	I_F = 30 mA, I_C = 1.8 mA		H21A1	—	—	0.40	V
Turn-On Time	I_F = 30 mA, V_{CC} = 5 V, R_L = 2.5 KΩ	t_{on}	All	—	8	—	µs
Turn-Off Time	I_F = 30 mA, V_{CC} = 5 V, R_L = 2.5 KΩ	t_{off}	All	—	50	—	µs

Figure 1. Output Current vs. Input Current

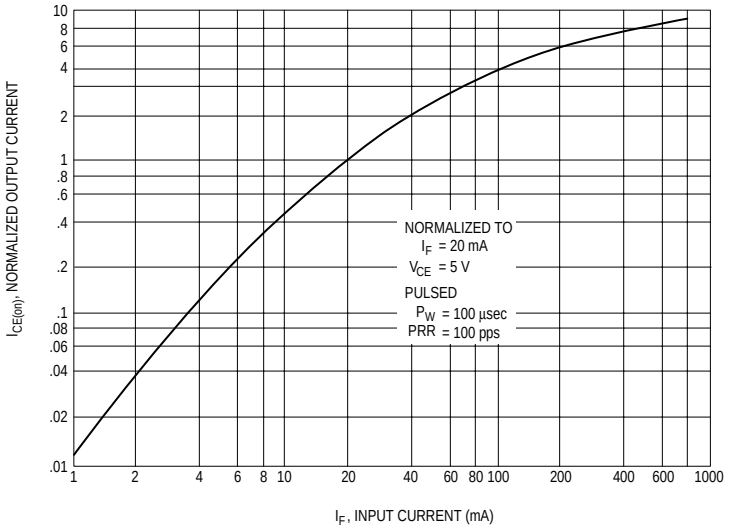

Figure 2. Output Current vs. Temperature

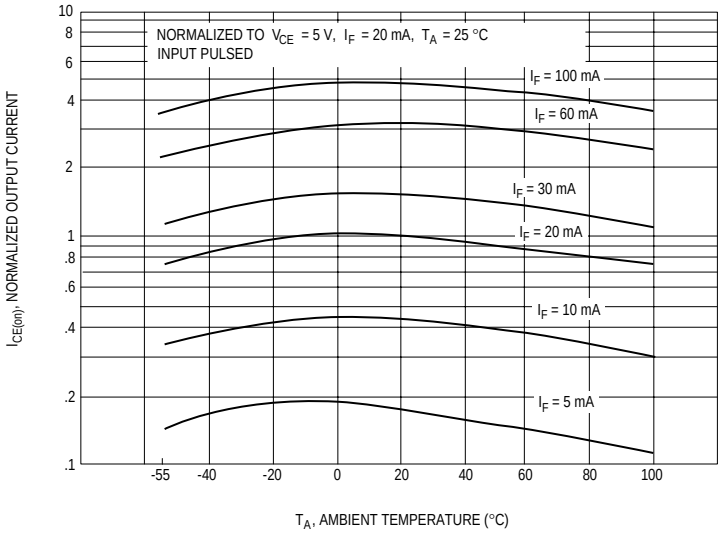

Figure 3. $V_{CE(SAT)}$ vs. Temperature

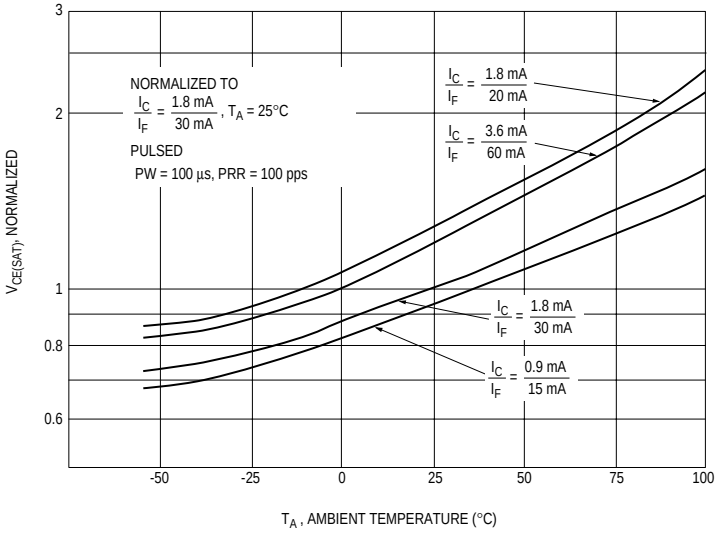

Figure 4. Leakage Current vs. Temperature

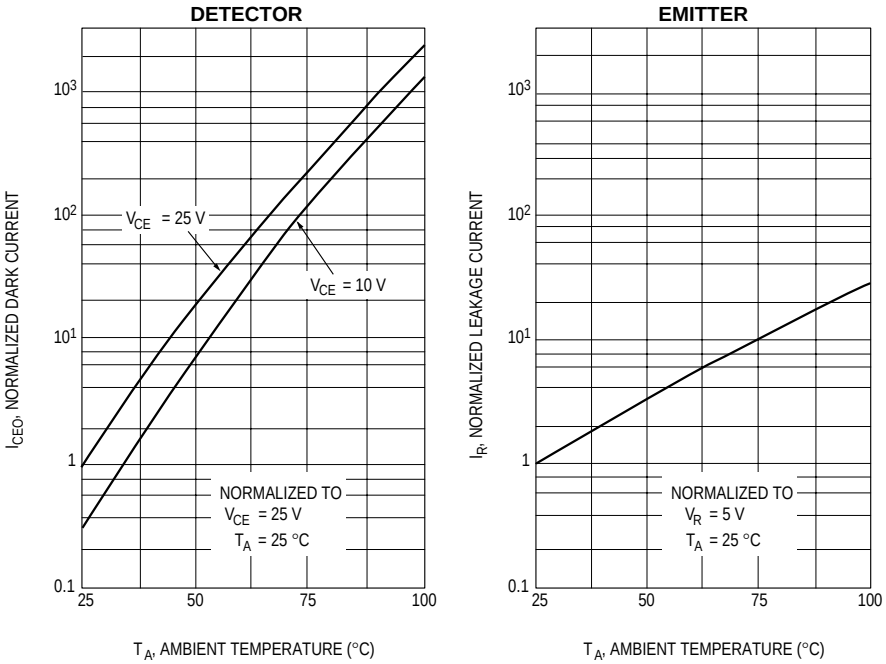

Figure 5. Switching Speed vs. RL

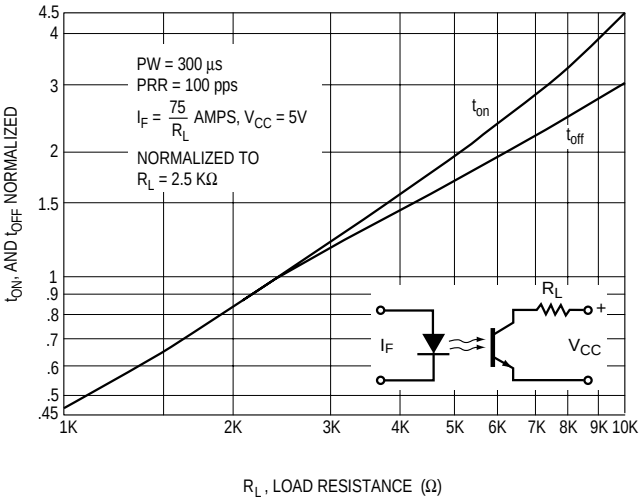

Figure 6. Output Current vs. Distance

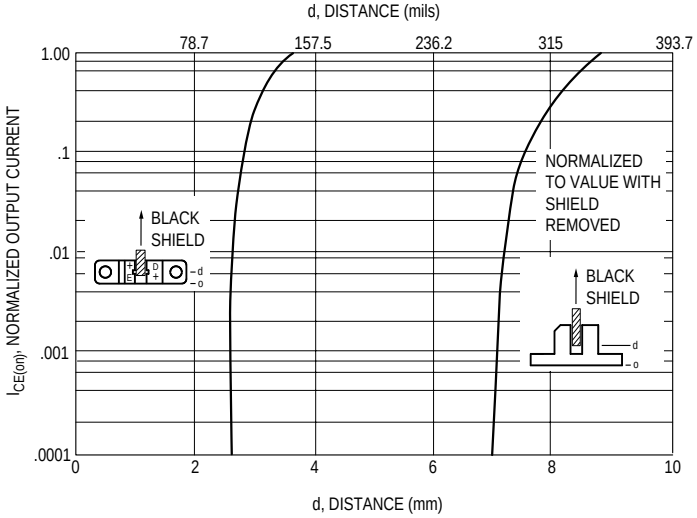

DISCLAIMER

FAIRCHILD SEMICONDUCTOR RESERVES THE RIGHT TO MAKE CHANGES WITHOUT FURTHER NOTICE TO ANY PRODUCTS HEREIN TO IMPROVE RELIABILITY, FUNCTION OR DESIGN. FAIRCHILD DOES NOT ASSUME ANY LIABILITY ARISING OUT OF THE APPLICATION OR USE OF ANY PRODUCT OR CIRCUIT DESCRIBED HEREIN; NEITHER DOES IT CONVEY ANY LICENSE UNDER ITS PATENT RIGHTS, NOR THE RIGHTS OF OTHERS.

LIFE SUPPORT POLICY

FAIRCHILD'S PRODUCTS ARE NOT AUTHORIZED FOR USE AS CRITICAL COMPONENTS IN LIFE SUPPORT DEVICES OR SYSTEMS WITHOUT THE EXPRESS WRITTEN APPROVAL OF THE PRESIDENT OF FAIRCHILD SEMICONDUCTOR CORPORATION. As used herein:

1. Life support devices or systems are devices or systems which, (a) are intended for surgical implant into the body,or (b) support or sustain life, and (c) whose failure to perform when properly used in accordance with instructions for use provided in labeling, can be reasonably expected to result in a significant injury of the user.
2. A critical component in any component of a life support device or system whose failure to perform can be reasonably expected to cause the failure of the life support device or system, or to affect its safety or effectiveness.

November 2000

National Semiconductor

LM35
Precision Centigrade Temperature Sensors

General Description

The LM35 series are precision integrated-circuit temperature sensors, whose output voltage is linearly proportional to the Celsius (Centigrade) temperature. The LM35 thus has an advantage over linear temperature sensors calibrated in ˚ Kelvin, as the user is not required to subtract a large constant voltage from its output to obtain convenient Centigrade scaling. The LM35 does not require any external calibration or trimming to provide typical accuracies of ±¼˚C at room temperature and ±¾˚C over a full −55 to +150˚C temperature range. Low cost is assured by trimming and calibration at the wafer level. The LM35's low output impedance, linear output, and precise inherent calibration make interfacing to readout or control circuitry especially easy. It can be used with single power supplies, or with plus and minus supplies. As it draws only 60 µA from its supply, it has very low self-heating, less than 0.1˚C in still air. The LM35 is rated to operate over a −55˚ to +150˚C temperature range, while the LM35C is rated for a −40˚ to +110˚C range (−10˚ with improved accuracy). The LM35 series is available packaged in hermetic TO-46 transistor packages, while the LM35C, LM35CA, and LM35D are also available in the plastic TO-92 transistor package. The LM35D is also available in an 8-lead surface mount small outline package and a plastic TO-220 package.

Features

- Calibrated directly in ˚ Celsius (Centigrade)
- Linear + 10.0 mV/˚C scale factor
- 0.5˚C accuracy guaranteeable (at +25˚C)
- Rated for full −55˚ to +150˚C range
- Suitable for remote applications
- Low cost due to wafer-level trimming
- Operates from 4 to 30 volts
- Less than 60 µA current drain
- Low self-heating, 0.08˚C in still air
- Nonlinearity only ±¼˚C typical
- Low impedance output, 0.1 Ω for 1 mA load

Typical Applications

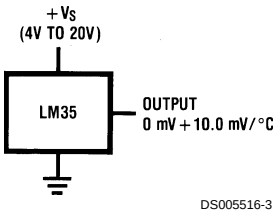

FIGURE 1. Basic Centigrade Temperature Sensor (+2˚C to +150˚C)

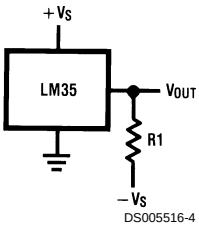

Choose $R_1 = -V_S/50\ \mu A$
V_{OUT}=+1,500 mV at +150˚C
= +250 mV at +25˚C
= −550 mV at −55˚C

FIGURE 2. Full-Range Centigrade Temperature Sensor

Connection Diagrams

TO-46
Metal Can Package*

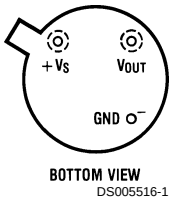

*Case is connected to negative pin (GND)

Order Number LM35H, LM35AH, LM35CH, LM35CAH or LM35DH
See NS Package Number H03H

SO-8
Small Outline Molded Package

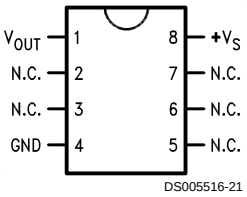

N.C. = No Connection

Top View
Order Number LM35DM
See NS Package Number M08A

TO-92
Plastic Package

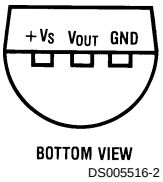

Order Number LM35CZ, LM35CAZ or LM35DZ
See NS Package Number Z03A

TO-220
Plastic Package*

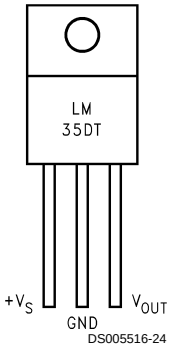

*Tab is connected to the negative pin (GND).
Note: The LM35DT pinout is different than the discontinued LM35DP.

Order Number LM35DT
See NS Package Number TA03F

Absolute Maximum Ratings (Note 10)

If Military/Aerospace specified devices are required, please contact the National Semiconductor Sales Office/ Distributors for availability and specifications.

Supply Voltage	+35V to −0.2V
Output Voltage	+6V to −1.0V
Output Current	10 mA
Storage Temp.;	
TO-46 Package,	−60˚C to +180˚C
TO-92 Package,	−60˚C to +150˚C
SO-8 Package,	−65˚C to +150˚C
TO-220 Package,	−65˚C to +150˚C
Lead Temp.:	
TO-46 Package, (Soldering, 10 seconds)	300˚C
TO-92 and TO-220 Package, (Soldering, 10 seconds)	260˚C
SO Package (Note 12)	
Vapor Phase (60 seconds)	215˚C
Infrared (15 seconds)	220˚C
ESD Susceptibility (Note 11)	2500V
Specified Operating Temperature Range: T_{MIN} to T_{MAX} (Note 2)	
LM35, LM35A	−55˚C to +150˚C
LM35C, LM35CA	−40˚C to +110˚C
LM35D	0˚C to +100˚C

Electrical Characteristics

(Notes 1, 6)

Parameter	Conditions	LM35A			LM35CA			Units (Max.)
		Typical	Tested Limit (Note 4)	Design Limit (Note 5)	Typical	Tested Limit (Note 4)	Design Limit (Note 5)	
Accuracy (Note 7)	T_A=+25˚C	±0.2	±0.5		±0.2	±0.5		˚C
	T_A=−10˚C	±0.3			±0.3		±1.0	˚C
	T_A=T_{MAX}	±0.4	±1.0		±0.4	±1.0		˚C
	T_A=T_{MIN}	±0.4	±1.0		±0.4		±1.5	˚C
Nonlinearity (Note 8)	T_{MIN}≤T_A≤T_{MAX}	**±0.18**		**±0.35**	**±0.15**		**±0.3**	˚C
Sensor Gain (Average Slope)	T_{MIN}≤T_A≤T_{MAX}	**+10.0**	**+9.9, +10.1**		**+10.0**		**+9.9, +10.1**	mV/˚C
Load Regulation (Note 3) 0≤I_L≤1 mA	T_A=+25˚C	±0.4	±1.0		±0.4	±1.0		mV/mA
	T_{MIN}≤T_A≤T_{MAX}	**±0.5**		**±3.0**	**±0.5**		**±3.0**	mV/mA
Line Regulation (Note 3)	T_A=+25˚C	±0.01	±0.05		±0.01	±0.05		mV/V
	4V≤V_S≤30V	**±0.02**		**±0.1**	**±0.02**		**±0.1**	mV/V
Quiescent Current (Note 9)	V_S=+5V, +25˚C	56	67		56	67		µA
	V_S=+5V	**105**		**131**	**91**		**114**	µA
	V_S=+30V, +25˚C	56.2	68		56.2	68		µA
	V_S=+30V	**105.5**		**133**	**91.5**		**116**	µA
Change of Quiescent Current (Note 3)	4V≤V_S≤30V, +25˚C	0.2	1.0		0.2	1.0		µA
	4V≤V_S≤30V	**0.5**		**2.0**	**0.5**		**2.0**	µA
Temperature Coefficient of Quiescent Current		**+0.39**		**+0.5**	**+0.39**		**+0.5**	µA/˚C
Minimum Temperature for Rated Accuracy	In circuit of *Figure 1*, I_L=0	+1.5		+2.0	+1.5		+2.0	˚C
Long Term Stability	T_J=T_{MAX}, for 1000 hours	±0.08			±0.08			˚C

Electrical Characteristics

(Notes 1, 6)

Parameter	Conditions	LM35			LM35C, LM35D			Units (Max.)
		Typical	Tested Limit (Note 4)	Design Limit (Note 5)	Typical	Tested Limit (Note 4)	Design Limit (Note 5)	
Accuracy, LM35, LM35C (Note 7)	T_A=+25˚C	±0.4	±1.0		±0.4	±1.0		˚C
	T_A=−10˚C	±0.5			±0.5		±1.5	˚C
	$T_A=T_{MAX}$	±0.8	±1.5		±0.8		±1.5	˚C
	$T_A=T_{MIN}$	±0.8		±1.5	±0.8		±2.0	˚C
Accuracy, LM35D (Note 7)	T_A=+25˚C				±0.6	±1.5		˚C
	$T_A=T_{MAX}$				±0.9		±2.0	˚C
	$T_A=T_{MIN}$				±0.9		±2.0	˚C
Nonlinearity (Note 8)	$T_{MIN}\leq T_A\leq T_{MAX}$	**±0.3**		**±0.5**	**±0.2**		**±0.5**	˚C
Sensor Gain (Average Slope)	$T_{MIN}\leq T_A\leq T_{MAX}$	**+10.0**	**+9.8, +10.2**		**+10.0**		**+9.8, +10.2**	mV/˚C
Load Regulation (Note 3) $0\leq I_L\leq 1$ mA	T_A=+25˚C	±0.4	±2.0		±0.4	±2.0		mV/mA
	$T_{MIN}\leq T_A\leq T_{MAX}$	**±0.5**		**±5.0**	**±0.5**		**±5.0**	mV/mA
Line Regulation (Note 3)	T_A=+25˚C	±0.01	±0.1		±0.01	±0.1		mV/V
	$4V\leq V_S\leq 30V$	**±0.02**		**±0.2**	**±0.02**		**±0.2**	mV/V
Quiescent Current (Note 9)	V_S=+5V, +25˚C	56	80		56	80		µA
	V_S=+5V	**105**		**158**	**91**		**138**	µA
	V_S=+30V, +25˚C	56.2	82		56.2	82		µA
	V_S=+30V	**105.5**		**161**	**91.5**		**141**	µA
Change of Quiescent Current (Note 3)	$4V\leq V_S\leq 30V$, +25˚C	0.2	2.0		0.2	2.0		µA
	$4V\leq V_S\leq 30V$	**0.5**		**3.0**	**0.5**		**3.0**	µA
Temperature Coefficient of Quiescent Current		**+0.39**		**+0.7**	**+0.39**		**+0.7**	µA/˚C
Minimum Temperature for Rated Accuracy	In circuit of *Figure 1*, I_L=0	+1.5		+2.0	+1.5		+2.0	˚C
Long Term Stability	$T_J=T_{MAX}$, for 1000 hours	±0.08			±0.08			˚C

Note 1: Unless otherwise noted, these specifications apply: −55˚C≤T_J≤+150˚C for the LM35 and LM35A; −40˚≤T_J≤+110˚C for the LM35C and LM35CA; and 0˚≤T_J≤+100˚C for the LM35D. V_S=+5Vdc and I_{LOAD}=50 µA, in the circuit of *Figure 2*. These specifications also apply from +2˚C to T_{MAX} in the circuit of *Figure 1*. Specifications in **boldface** apply over the full rated temperature range.

Note 2: Thermal resistance of the TO-46 package is 400˚C/W, junction to ambient, and 24˚C/W junction to case. Thermal resistance of the TO-92 package is 180˚C/W junction to ambient. Thermal resistance of the small outline molded package is 220˚C/W junction to ambient. Thermal resistance of the TO-220 package is 90˚C/W junction to ambient. For additional thermal resistance information see table in the Applications section.

Note 3: Regulation is measured at constant junction temperature, using pulse testing with a low duty cycle. Changes in output due to heating effects can be computed by multiplying the internal dissipation by the thermal resistance.

Note 4: Tested Limits are guaranteed and 100% tested in production.

Note 5: Design Limits are guaranteed (but not 100% production tested) over the indicated temperature and supply voltage ranges. These limits are not used to calculate outgoing quality levels.

Note 6: Specifications in **boldface** apply over the full rated temperature range.

Note 7: Accuracy is defined as the error between the output voltage and 10mv/˚C times the device's case temperature, at specified conditions of voltage, current, and temperature (expressed in ˚C).

Note 8: Nonlinearity is defined as the deviation of the output-voltage-versus-temperature curve from the best-fit straight line, over the device's rated temperature range.

Note 9: Quiescent current is defined in the circuit of *Figure 1*.

Note 10: Absolute Maximum Ratings indicate limits beyond which damage to the device may occur. DC and AC electrical specifications do not apply when operating the device beyond its rated operating conditions. See Note 1.

Note 11: Human body model, 100 pF discharged through a 1.5 kΩ resistor.

Note 12: See AN-450 "Surface Mounting Methods and Their Effect on Product Reliability" or the section titled "Surface Mount" found in a current National Semiconductor Linear Data Book for other methods of soldering surface mount devices.

Typical Performance Characteristics

Thermal Resistance Junction to Air

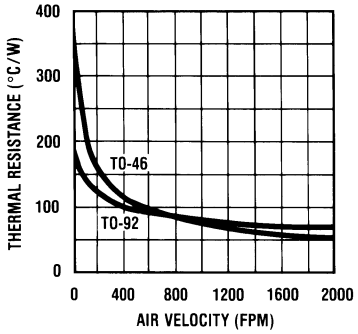

DS005516-25

Thermal Time Constant

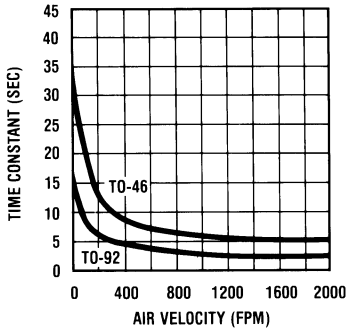

DS005516-26

Thermal Response in Still Air

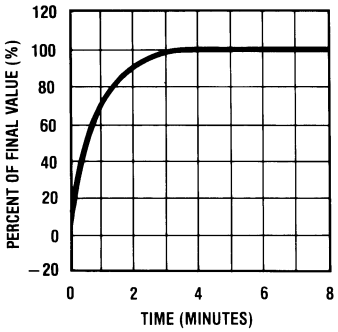

DS005516-27

Thermal Response in Stirred Oil Bath

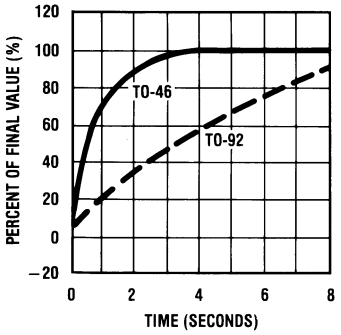

DS005516-28

Minimum Supply Voltage vs. Temperature

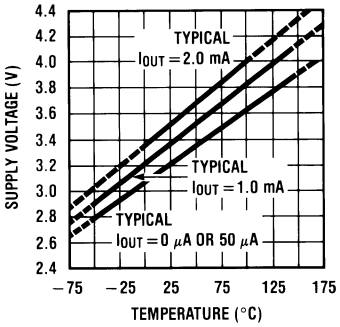

DS005516-29

Quiescent Current vs. Temperature (In Circuit of *Figure 1*.)

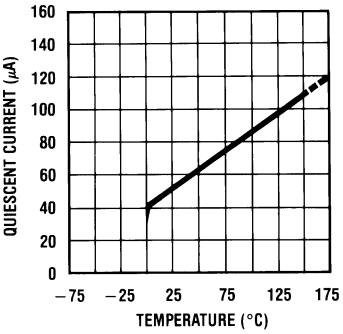

DS005516-30

Quiescent Current vs. Temperature (In Circuit of *Figure 2*.)

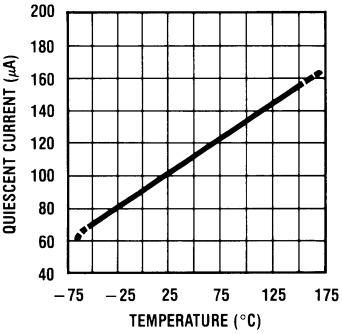

DS005516-31

Accuracy vs. Temperature (Guaranteed)

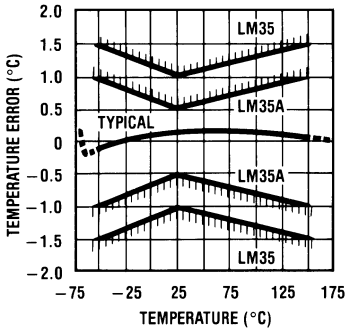

DS005516-32

Accuracy vs. Temperature (Guaranteed)

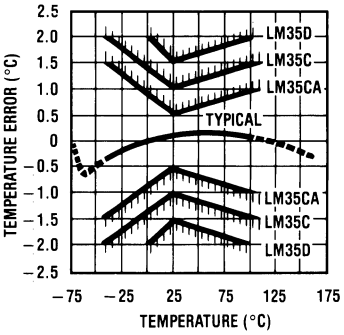

DS005516-33

Typical Performance Characteristics (Continued)

Noise Voltage

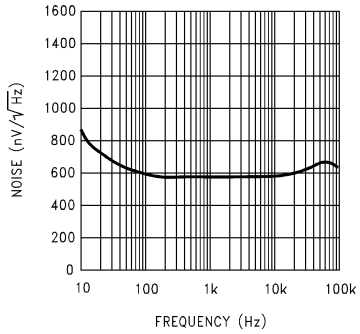

DS005516-34

Start-Up Response

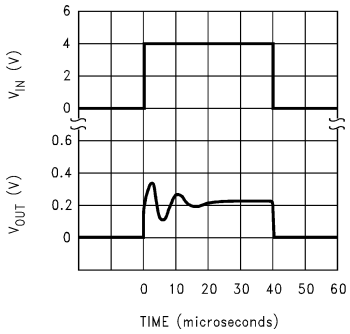

DS005516-35

Applications

The LM35 can be applied easily in the same way as other integrated-circuit temperature sensors. It can be glued or cemented to a surface and its temperature will be within about 0.01˚C of the surface temperature.

This presumes that the ambient air temperature is almost the same as the surface temperature; if the air temperature were much higher or lower than the surface temperature, the actual temperature of the LM35 die would be at an intermediate temperature between the surface temperature and the air temperature. This is expecially true for the TO-92 plastic package, where the copper leads are the principal thermal path to carry heat into the device, so its temperature might be closer to the air temperature than to the surface temperature.

To minimize this problem, be sure that the wiring to the LM35, as it leaves the device, is held at the same temperature as the surface of interest. The easiest way to do this is to cover up these wires with a bead of epoxy which will insure that the leads and wires are all at the same temperature as the surface, and that the LM35 die's temperature will not be affected by the air temperature.

The TO-46 metal package can also be soldered to a metal surface or pipe without damage. Of course, in that case the V− terminal of the circuit will be grounded to that metal. Alternatively, the LM35 can be mounted inside a sealed-end metal tube, and can then be dipped into a bath or screwed into a threaded hole in a tank. As with any IC, the LM35 and accompanying wiring and circuits must be kept insulated and dry, to avoid leakage and corrosion. This is especially true if the circuit may operate at cold temperatures where condensation can occur. Printed-circuit coatings and varnishes such as Humiseal and epoxy paints or dips are often used to insure that moisture cannot corrode the LM35 or its connections.

These devices are sometimes soldered to a small light-weight heat fin, to decrease the thermal time constant and speed up the response in slowly-moving air. On the other hand, a small thermal mass may be added to the sensor, to give the steadiest reading despite small deviations in the air temperature.

Temperature Rise of LM35 Due To Self-heating (Thermal Resistance, θ_{JA})

	TO-46, no heat sink	TO-46*, small heat fin	TO-92, no heat sink	TO-92**, small heat fin	SO-8 no heat sink	SO-8** small heat fin	TO-220 no heat sink
Still air	400˚C/W	100˚C/W	180˚C/W	140˚C/W	220˚C/W	110˚C/W	90˚C/W
Moving air	100˚C/W	40˚C/W	90˚C/W	70˚C/W	105˚C/W	90˚C/W	26˚C/W
Still oil	100˚C/W	40˚C/W	90˚C/W	70˚C/W			
Stirred oil	50˚C/W	30˚C/W	45˚C/W	40˚C/W			
(Clamped to metal, Infinite heat sink)	(24˚C/W)				(55˚C/W)		

*Wakefield type 201, or 1" disc of 0.020" sheet brass, soldered to case, or similar.
**TO-92 and SO-8 packages glued and leads soldered to 1" square of 1/16" printed circuit board with 2 oz. foil or similar.

Typical Applications

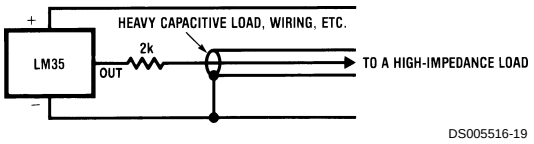

FIGURE 3. LM35 with Decoupling from Capacitive Load

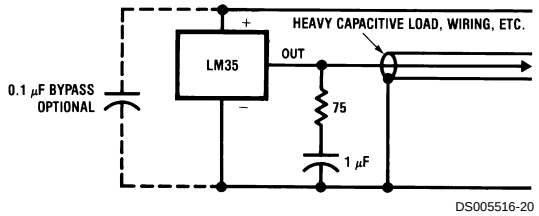

FIGURE 4. LM35 with R-C Damper

CAPACITIVE LOADS

Like most micropower circuits, the LM35 has a limited ability to drive heavy capacitive loads. The LM35 by itself is able to drive 50 pf without special precautions. If heavier loads are anticipated, it is easy to isolate or decouple the load with a resistor; see *Figure 3*. Or you can improve the tolerance of capacitance with a series R-C damper from output to ground; see *Figure 4*.

When the LM35 is applied with a 200Ω load resistor as shown in *Figure 5*, *Figure 6* or *Figure 8* it is relatively immune to wiring capacitance because the capacitance forms a bypass from ground to input, not on the output. However, as with any linear circuit connected to wires in a hostile environment, its performance can be affected adversely by intense electromagnetic sources such as relays, radio transmitters, motors with arcing brushes, SCR transients, etc, as its wiring can act as a receiving antenna and its internal junctions can act as rectifiers. For best results in such cases, a bypass capacitor from V_{IN} to ground and a series R-C damper such as 75Ω in series with 0.2 or 1 µF from output to ground are often useful. These are shown in *Figure 13*, *Figure 14*, and *Figure 16*.

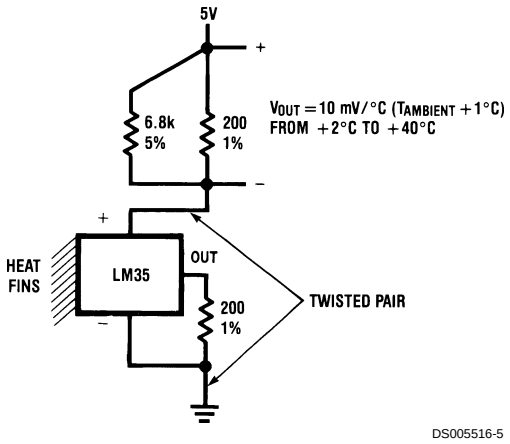

FIGURE 5. Two-Wire Remote Temperature Sensor (Grounded Sensor)

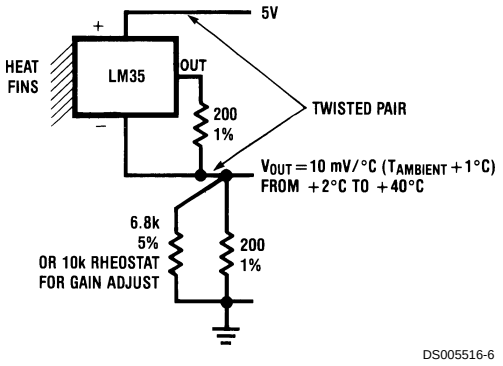

FIGURE 6. Two-Wire Remote Temperature Sensor (Output Referred to Ground)

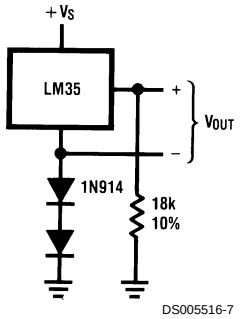

FIGURE 7. Temperature Sensor, Single Supply, −55˚ to +150˚C

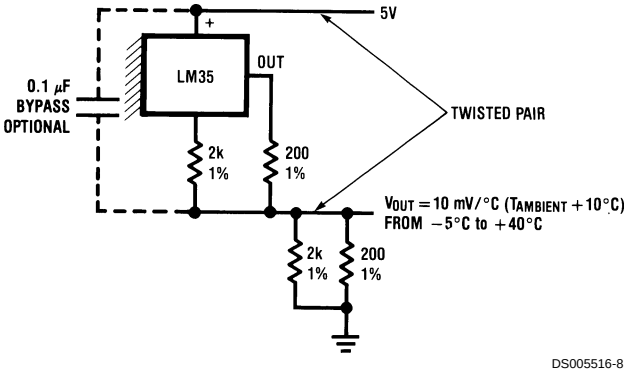

FIGURE 8. Two-Wire Remote Temperature Sensor (Output Referred to Ground)

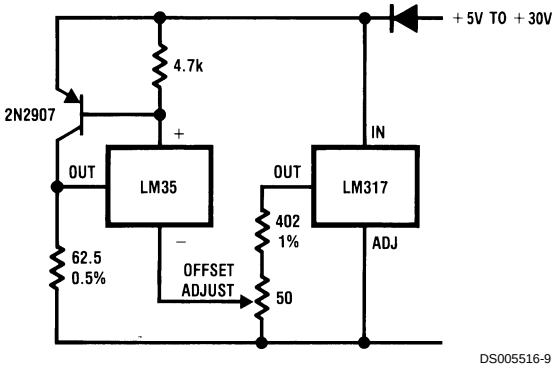

FIGURE 9. 4-To-20 mA Current Source (0˚C to +100˚C)

Typical Applications (Continued)

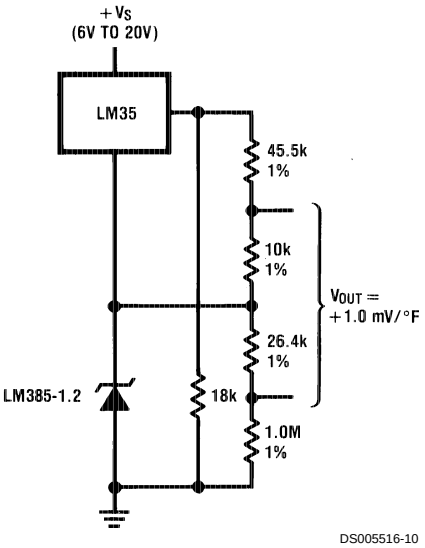

FIGURE 10. Fahrenheit Thermometer

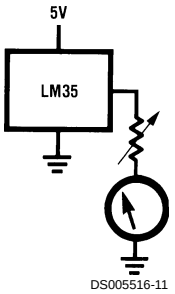

FIGURE 11. Centigrade Thermometer (Analog Meter)

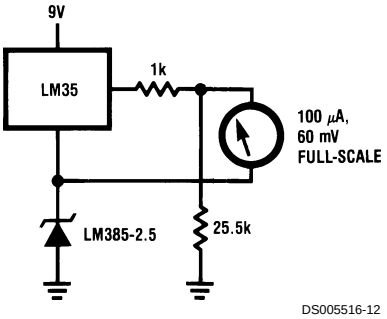

FIGURE 12. Fahrenheit ThermometerExpanded Scale Thermometer
(50˚ to 80˚ Fahrenheit, for Example Shown)

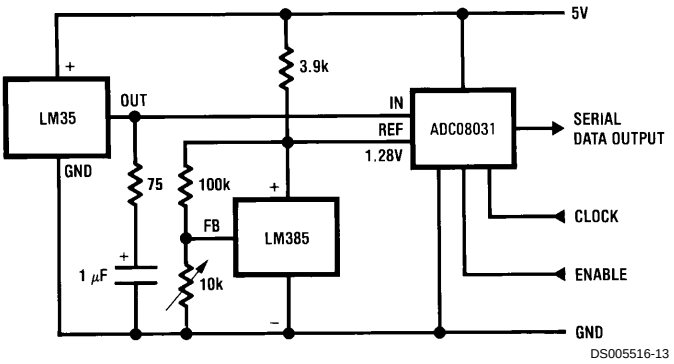

FIGURE 13. Temperature To Digital Converter (Serial Output) (+128˚C Full Scale)

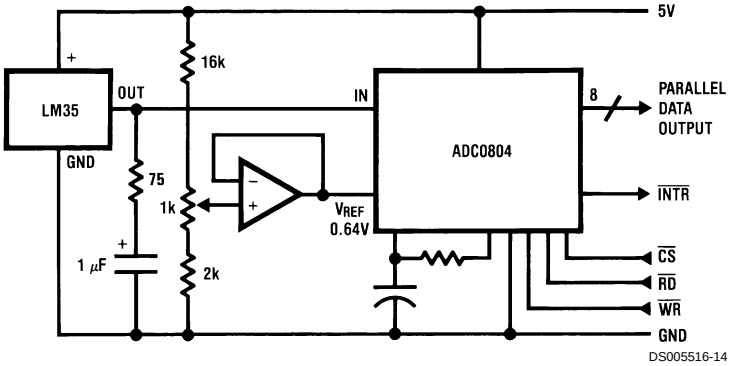

FIGURE 14. Temperature To Digital Converter (Parallel TRI-STATE™ Outputs for Standard Data Bus to μP Interface) (128˚C Full Scale)

Typical Applications (Continued)

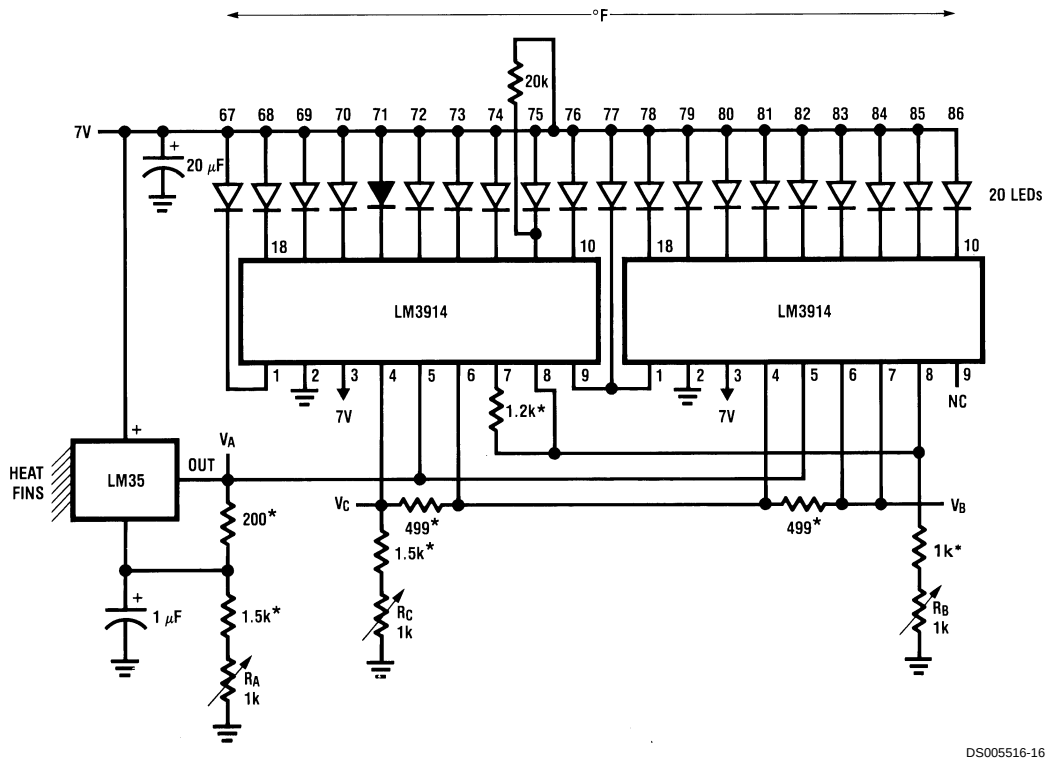

*=1% or 2% film resistor
Trim R_B for V_B=3.075V
Trim R_C for V_C=1.955V
Trim R_A for V_A=0.075V + 100mV/°C x $T_{ambient}$
Example, V_A=2.275V at 22°C

FIGURE 15. Bar-Graph Temperature Display (Dot Mode)

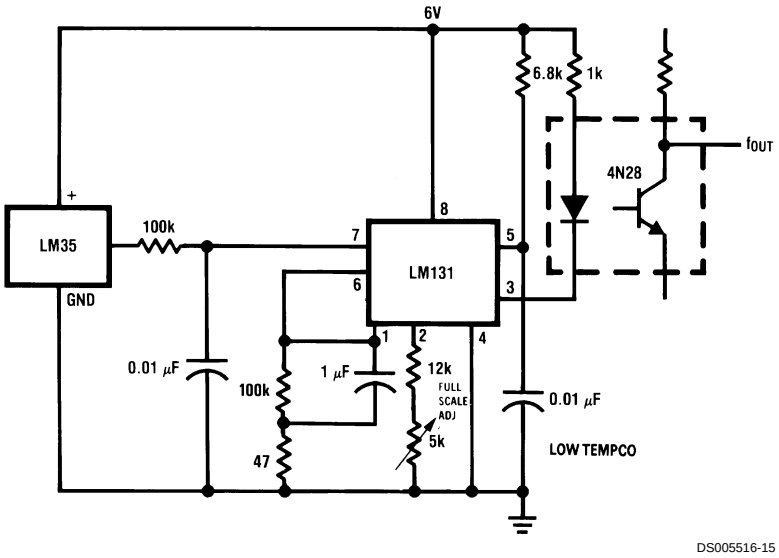

FIGURE 16. LM35 With Voltage-To-Frequency Converter And Isolated Output (2°C to +150°C; 20 Hz to 1500 Hz)

Block Diagram

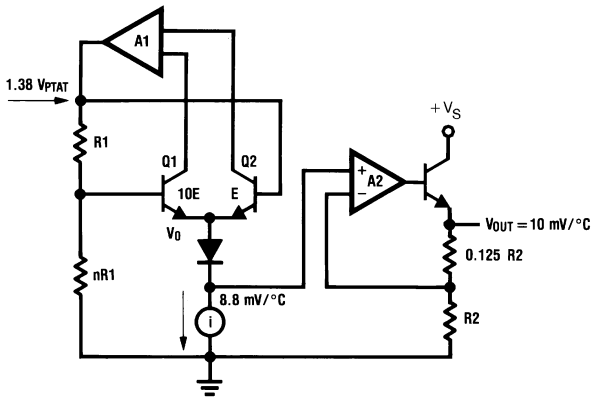

DS005516-23

Physical Dimensions inches (millimeters) unless otherwise noted

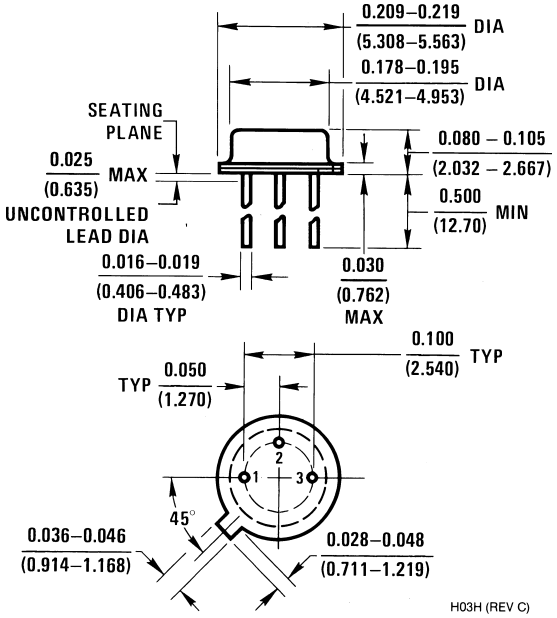

TO-46 Metal Can Package (H)
Order Number LM35H, LM35AH, LM35CH, LM35CAH, or LM35DH
NS Package Number H03H

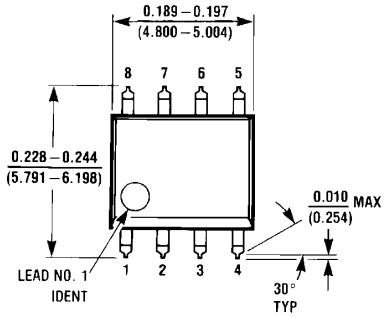

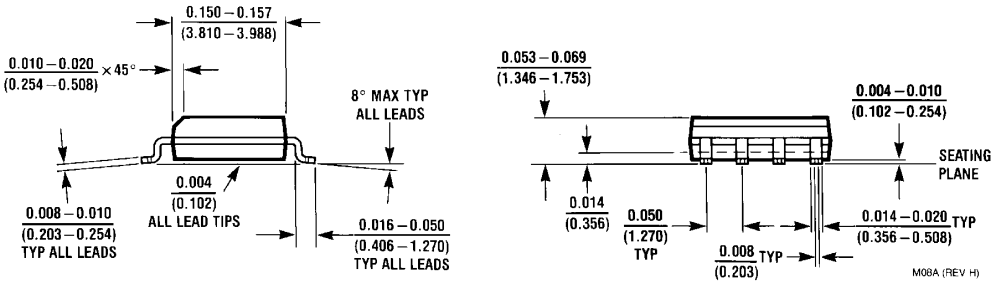

SO-8 Molded Small Outline Package (M)
Order Number LM35DM
NS Package Number M08A

Physical Dimensions inches (millimeters) unless otherwise noted (Continued)

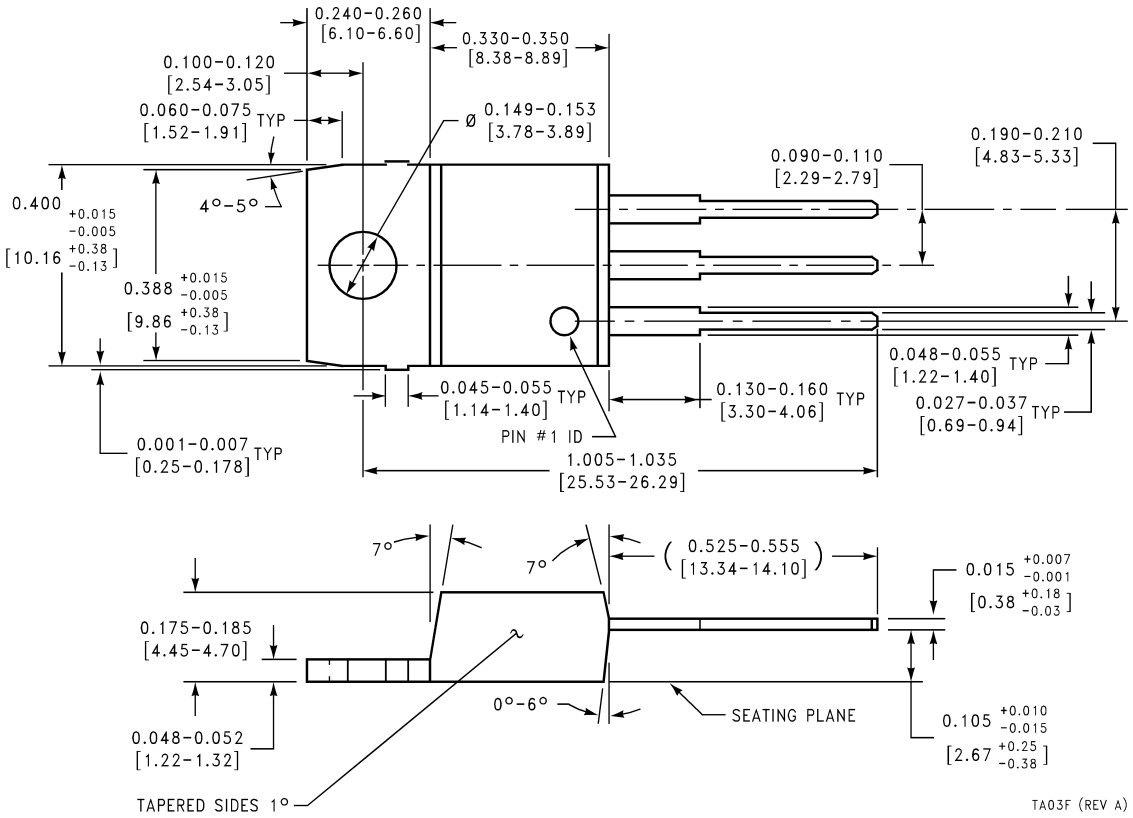

Power Package TO-220 (T)
Order Number LM35DT
NS Package Number TA03F

Physical Dimensions inches (millimeters) unless otherwise noted (Continued)

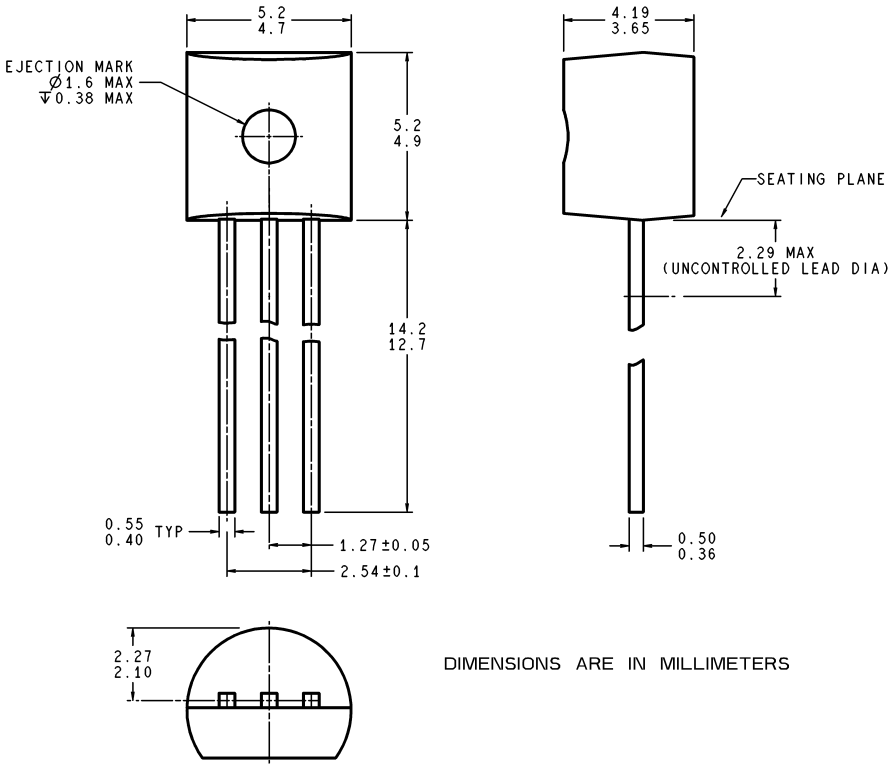

TO-92 Plastic Package (Z)
Order Number LM35CZ, LM35CAZ or LM35DZ
NS Package Number Z03A

LIFE SUPPORT POLICY

NATIONAL'S PRODUCTS ARE NOT AUTHORIZED FOR USE AS CRITICAL COMPONENTS IN LIFE SUPPORT DEVICES OR SYSTEMS WITHOUT THE EXPRESS WRITTEN APPROVAL OF THE PRESIDENT AND GENERAL COUNSEL OF NATIONAL SEMICONDUCTOR CORPORATION. As used herein:

1. Life support devices or systems are devices or systems which, (a) are intended for surgical implant into the body, or (b) support or sustain life, and whose failure to perform when properly used in accordance with instructions for use provided in the labeling, can be reasonably expected to result in a significant injury to the user.
2. A critical component is any component of a life support device or system whose failure to perform can be reasonably expected to cause the failure of the life support device or system, or to affect its safety or effectiveness.

National Semiconductor Corporation
Americas
Tel: 1-800-272-9959
Fax: 1-800-737-7018
Email: support@nsc.com
www.national.com

National Semiconductor Europe
Fax: +49 (0) 180-530 85 86
Email: europe.support@nsc.com
Deutsch Tel: +49 (0) 69 9508 6208
English Tel: +44 (0) 870 24 0 2171
Français Tel: +33 (0) 1 41 91 8790

National Semiconductor Asia Pacific Customer Response Group
Tel: 65-2544466
Fax: 65-2504466
Email: ap.support@nsc.com

National Semiconductor Japan Ltd.
Tel: 81-3-5639-7560
Fax: 81-3-5639-7507

285-784 M641

PIEZOELECTRIC CERAMIC BIMORPH ELEMENT

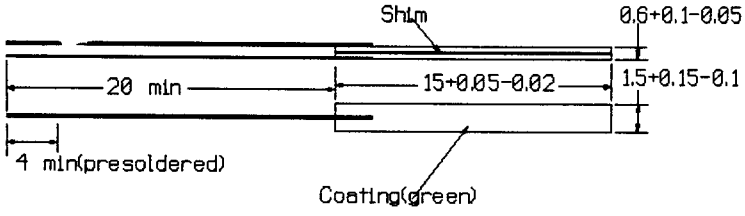

This piezoceramic bi-morph element is a versatile low power electromechanical transducer capable of converting mechanical or acoustic energy to electrical energy. When the element is stressed or subjected to vibration, the minute movement causes one layer to be under tension while the other is under compression, since the two layers are polarised in opposite directions the opposite stresses in each layer will produce an electrical output or charge.

FEATURES:

- High compliance
- Low mass
- High efficiency
- Non-magnetic
- High Capacitance - low impedance
- Moisture proof

APPLICATIONS:

- Vibration/stress sensors
- Phonograph cartridges
- Micro-positioners

TECHNICAL SPECIFICATION:

Dimensions:	15mm x 1.5mm x 0.6mm
Capacitance:	750pF ± 170
Dielectric Constant :	ε2000
Piezo constant -	9^{31} ($\times 10^{-3}$ V-m/N): 12.1
Electromechanical Coupling Factor:	60
Compliance ($\times 10^{-4}$ m^2/N):	6.6
Max stress:	50-100μm
Output:	@ 5mm clamp from lead-end (cantilever action) vibration @ 10μm P-P = 4V P-P
Impedance:	Z = 1 M OHM

TABLE 1

Typical Symbols Employed in Describing Properties of Piezoelectric Materials

Strictly speaking these symbols are used to identify properties of MATERIALS only, and should not be used to describe characteristics of actual physical elements made of these materials. However, for convenience, some liberties have been taken in the explanations - electric boundary conditions are identified by indicating locations and connections of electrodes.

S^{D}_{11} D — Indicates that compliance is measured with electric circuit open 11 — Indicates that STRESS or strain is in 1 direction Indicates that STRAIN or stress is in 1 direction Compliance $= \frac{\text{strain}}{\text{stress}}$ (All stresses, other than the stress involved in one subscript, are constant).	S^{E}_{36} E — Indicates that compliance is measured with electrodes connected together. 36 — Indicates that STRESS or strain is in shear form around 3 axis. Indicates that STRAIN or stress is in 3 direction Compliance $= \frac{\text{strain}}{\text{stress}}$ (All stresses, other than the stress involved in one subscript, are constant).
K^{T}_{1} T — Indicates that all stresses on material are constant - forexample: zero external forces. 1 — Indicates that electrodes are perpendicular to 1 axis Relative dielectric constant $= \frac{\varepsilon^{T}_{1}}{\varepsilon^{0}}$	K^{S}_{3} S — Indicates that all strains in the material are constant- for example: material completely blocked preventing deformation in any direction. 3 — Indicates that electrodes are perpendicular to 3 axis relative dielectric constant $= \frac{\varepsilon^{S}_{3}}{\varepsilon^{0}}$
k_{15} 15 — Indicates that stress or strain is in shear form around 2 axis. Indicates that electrodes are perpendicular to 1 axis. Electromechanical coupling	k_{p} This subscript used only for ceramics. Indicates electrodes perpendicular to 3 axis, and stress or strain equal in all directions perpendicular to 3 axis. Electromechanical coupling.
d_{33} 33 — Indicates that the piezoelectrically induced strain, or the applied stress, is in 3 direction. Indicates that electrodes are perpendicular to 3 axis $\frac{\text{strain}}{\text{applied field}} = \frac{\text{short circuit charge/electrode area}}{\text{applied stress}}$ (All stresses, other than the stress involved in second subscript, are constant).	d_{h} Indicates that stress is applied equally in 1,2, and 3 directions (hydrostatic stress): and that electrodes are perpendicular to 3 axis for ceramics or 2 axis for Lithium sulphate. $\frac{\text{Short circuit charge/electrode area}}{\text{applied stress}}$
g_{31} 31 — Indicates that applied stress, or piezoelectrically induced strain is in 1 direction. Indicates that electrodes are perpendicular to 3 axis $\frac{\text{field}}{\text{applied stress}} = \frac{\text{strain}}{\text{applied charge/electrode area}}$ (All stresses, other than the stress involved in second subscript, are constant).	g_{15} 15 — Indicates that applied stress, or piezoelectrically induced strain is in shear form around 2 axis. Indicates that electrodes are perpendicularto 1 axis $\frac{\text{field}}{\text{applied stress}} = \frac{\text{strain}}{\text{applied charge/electrode area}}$ (All stresses, other than the stress involved in second subscript, are constant).

SP. No. ACS - 023

To :

CERAMIC BIMORPH SPECIFICATION

1. Scope

This specification covers ceramic bimorph
: EB - T - 320 , MADE IN JAPAN

2. Code

EB - T - 320

3. Shape and dimension

This is shown in external drawing : Fig.1

DRAWING
FOR REFERENCE

4. Ratings

Measuring requirement : temp.=23±5°C humi.=75 % RH max.

No.	Items	Specifications	Remarks
1.	Capacitance	750±175 pF	Measuring frequency : 1kHz Measuring voltage : 1Vrms
2.	Insulating resistance	30 MΩ min.	Measuring voltage : DC 50 V Measuring time : 1min.
3.	Operational temperature range	-20 ~ +60 °C	… … … … …
4.	Storage temperature range	-30 ~ +70 °C	… … … … …
5.	Storage humidity range	80 % RH max.	… … … … …

				APPROVED	CHECKED	DESIGNED	DRAWN
	株式会社村田製作所 技術部 5.5.10 圧電セラミック事業部			H. Yamamori	T. Ito	H. Aoki	H. Aoki
REVISIONS		DATE	DRAWN				

7. External drawing

1) Shape and dimension

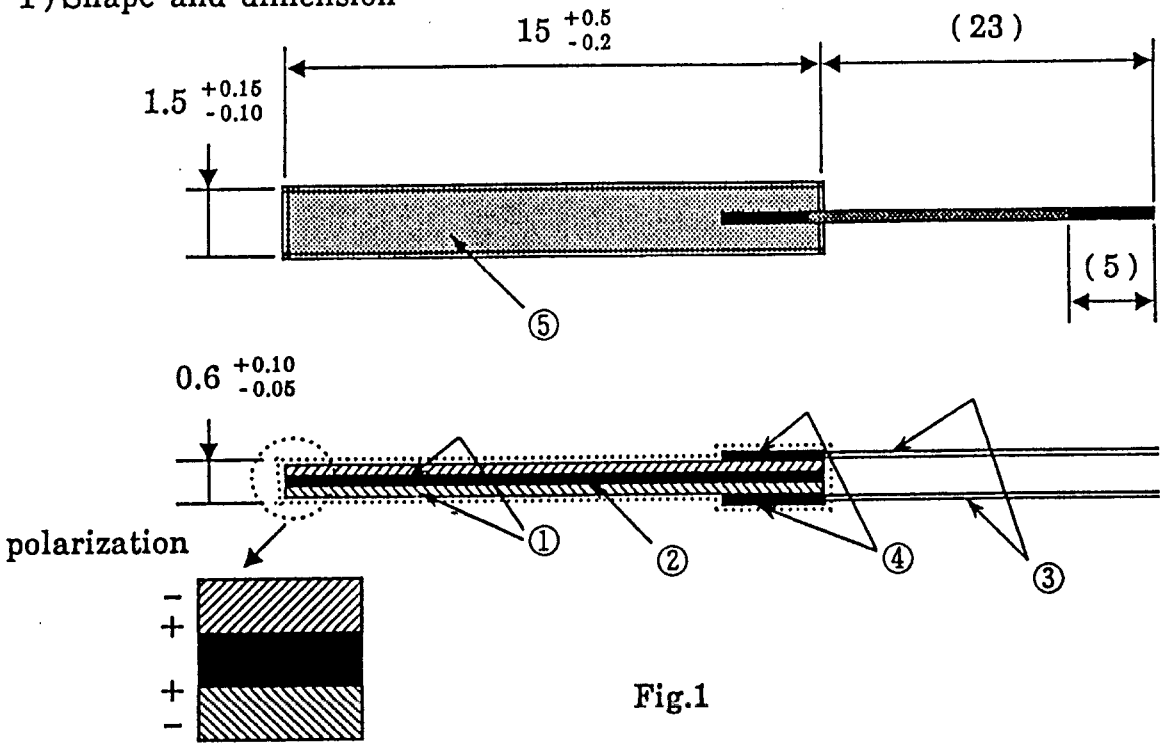

Fig.1

2) Parts list

No.	Names	Remarks
①	Piezoelectric ceramic	NTK code MT-11
②	Shim	Titanium 0.03t
③	Lead wire	polyurethane coverd copper wire 10×φ0.04
④	Solder	Low temperature solder 143 °C
⑤	Coating	Resin Green

5. Environmental characteristics

No.	Items	Test method	Requirement
1.	High temperature storage	Specimen shall be stored at +70 °C for 500 hours and then kept at normal temperature and humidity for 24 hours before measurement.	Capacitance changing rate ± 20% max. Insulating resistance 10 MΩ min.
2.	Low temperature storage	Specimen shall be stored at - 30 °C for 500 hours and then kept at normal temperature and humidity for 24 hours before measurement.	
3.	Humidity	Specimen shall be stored at +60 °C · 80% RH for 500 hours and then kept at normal temperature and humidity for 24 hours before measurement.	
4.	Temperature cycle	Specimen shall be stored at - 20 °C and +60 °C for 0.5 hour. (temperature gradient 50 °C / hour) After 25 cycles of this operation, and then kept at normal temperature and humidity for 24 hours before measurement.	

6. Others

1) Caution

This bimorph (EB - T - 320) electrode is silver. You shall be stored or operated this bimorph at bad conditions, high temperature and high humidity and input DC voltage, which insulating resistance is lower, affected silver migration.
Please use care storage and operation conditions.

2) Changes in specification

In the case of changes in specification, propose beforehand and discuss separately.