Sesungguhnya sesudah kesulitan itu ada kemudahan

(Alam Nasyrah 94:6)

Kupersembahkan untuk papah, mamah

dan semua orang yang kucintai

Lampiran 1

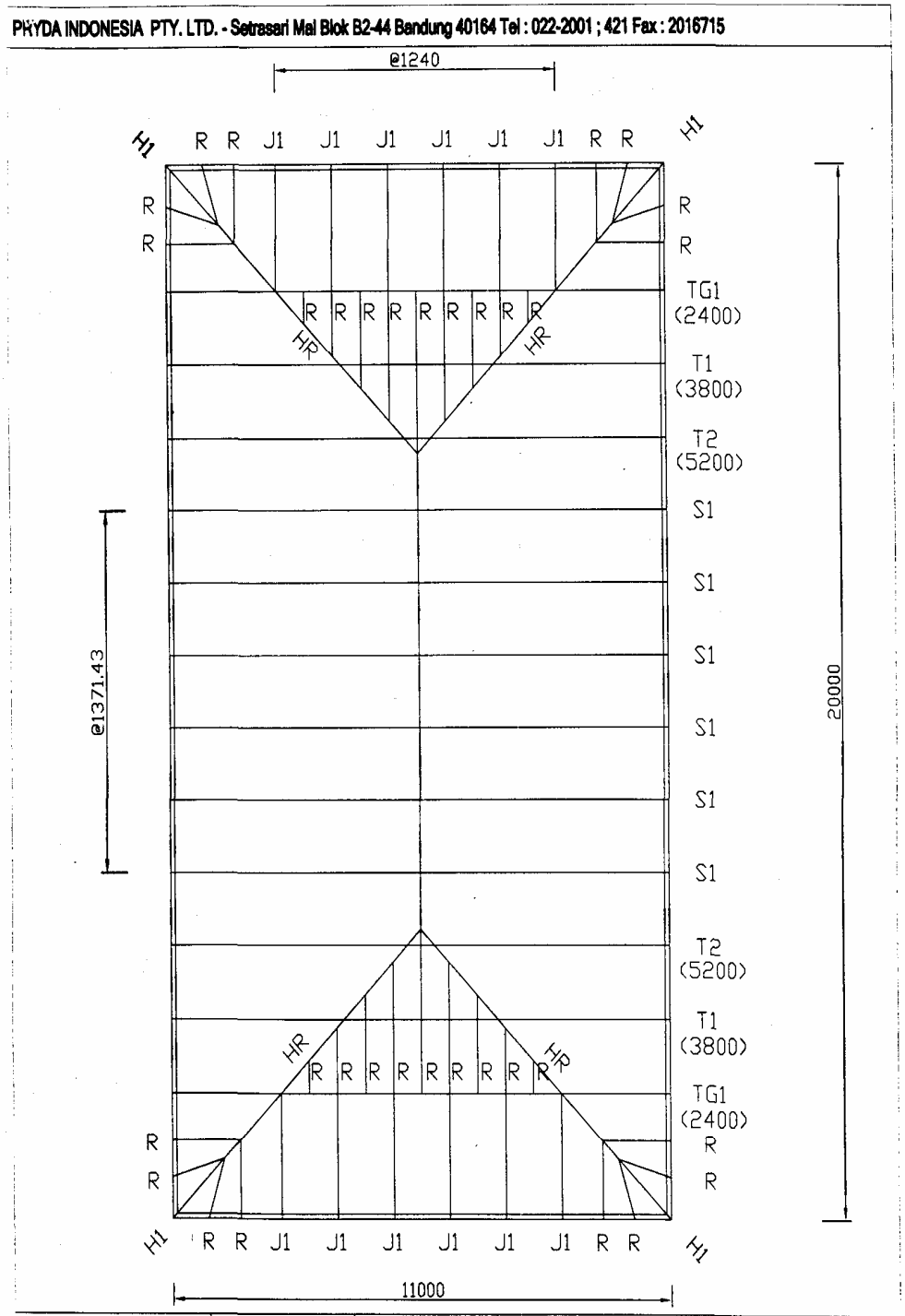

steelfast	JOB REF :	SCALE : 1 : 100	DRAWING TITLE : ROOF LAYOUT	DATE : 23/08/2005	NOTE :
	PROJECT :			PITCH : 30°	
			DESIGNER : Yohanes	ROOFING MATERIAL : Genteng Beton	
			PLAN AREA : 220 m² / ROOF AREA : 254.03 m²	SPACING : 1400 mm	

PT Multi Trussindo Perkasa
Setrasari Mal blok B2-44. Bandung 40164 tel: 022-200 1421. fax:201 6715

TRUSS DETAIL SHEET Job Ref: TA1

Customer: Tjeptjep Site Addr:

TRUSS DATA		**CHORDS**	**WEBS**	
Truss Type	: T/Gird	1 9 95G8	u.o.n 65G8	
TC pitch 1	: 30.00	9 11 95G10	3 15 75G10	
Station	: 2400	11 16 95G10	4 14 75G10	
Thickness	: 33	1 16 95G10	6 13 75G10	
Spacing	: 1400		7 12 75G10	
TC Restraint:	350		==========	
BC Restraint:	2000		3 15 75G10	S
			7 12 75G10	S

Timber Group: Steelumba
Building Importance : Residential
Roofing Material : Concrete tile-normal 490 Pa
Ceiling Material : 13mm P/Bd to battens 85 Pa
Overhang design assumes structural fascia.
Truss Mark <TG1 > 2 Single Trusses

< > = # screws @ joints, [ ] = # screws @ gusset Steelfast Truss
All screws 10g 16x16 self drilling hex head

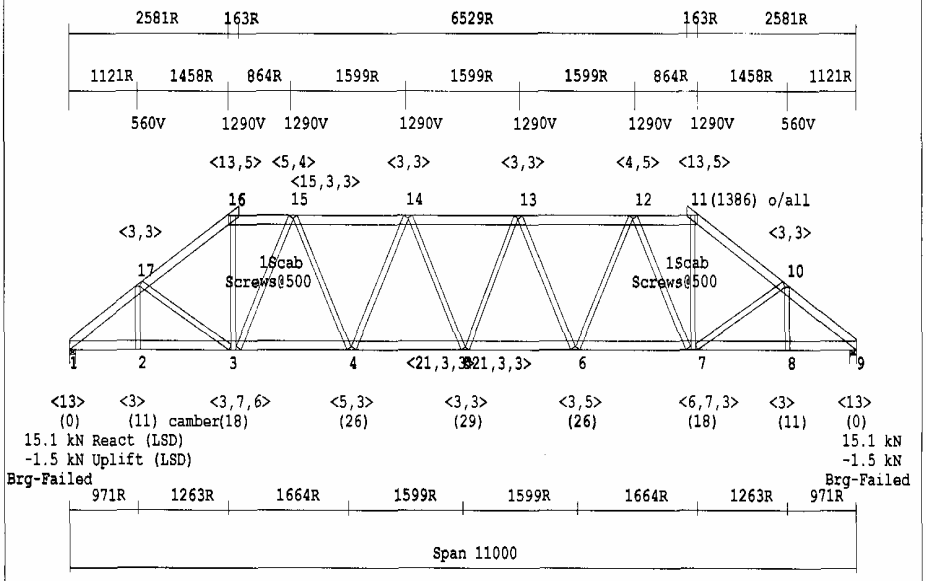

PT Multi Trussindo Perkasa
Setrasari Mal blok B2-44. Bandung 40164 tel: 022-200 1421. fax:201 6715

TRUSS DETAIL SHEET Job Ref: TA1

Customer: Tjeptjep Site Addr:

TRUSS DATA		CHORDS	WEBS
Truss Type	: T/Std	1 6 95G8	u.o.n 75G10
TC pitch 1	: 30.00	6 8 95G10	2 11 65G8
Station	: 3800	8 10 95G8	5 7 65G8
Thickness	: 33	1 10 95G10	
Spacing	: 1400		

TC Restraint: 350
BC Restraint: 2000
Timber Group: Steelumba
Building Importance : Residential
Roofing Material : Concrete tile-normal 490 Pa
Ceiling Material : 13mm P/Bd to battens 85 Pa
Overhang design assumes structural fascia.
Truss Mark <T1 > 2 Single Trusses

< > = # screws @ joints, [ ] = # screws @ gusset&steelfast Truss
All screws 10g 16x16 self drilling hex head

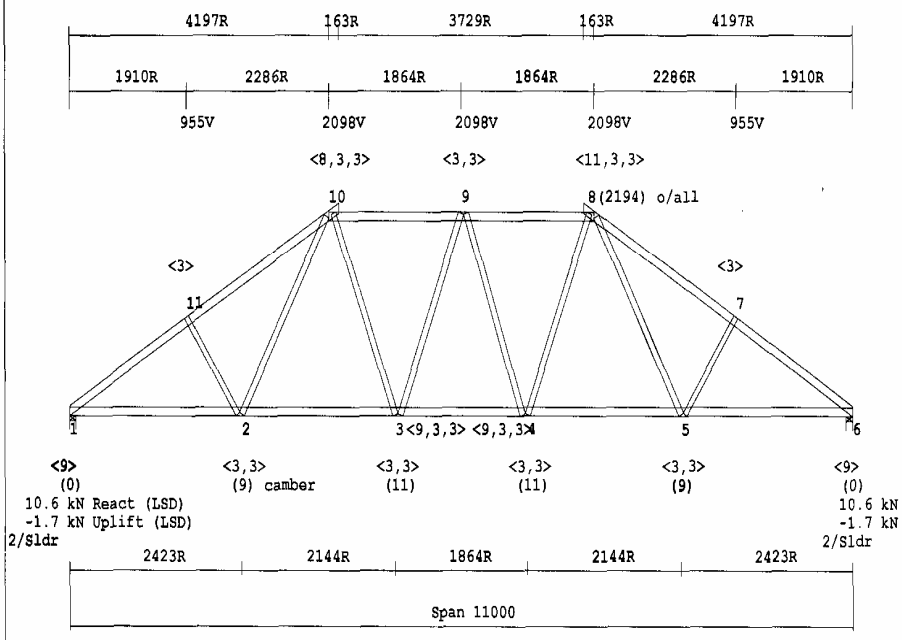

PT Multi Trussindo Perkasa
Setrasari Mal blok B2-44. Bandung 40164 tel: 022-200 1421. fax:201 6715

TRUSS DETAIL SHEET Job Ref: TA1

Customer: Tjeptjep Site Addr:

TRUSS DATA		CHORDS	WEBS		
Truss Type	: T/Std	1 7 95G8	u.o.n 75G10	5 10 75G10	S
TC pitch 1	: 30.00	7 10 95G10	2 13 65G8	5 9 65G8	S
Station	: 5200	10 11 95G8	3 12 65G8		
Thickness	: 33	1 11 95G10	5 9 65G8		
Spacing	: 1400		6 8 65G8		
TC Restraint:	350		==========		
BC Restraint:	2000		3 12 65G8 S		
			3 11 75G10 S		
			4 11 75G10 S		
			4 10 75G10 S		

Timber Group: Steelumba
Building Importance : Residential
Roofing Material : Concrete tile-normal 490 Pa
Ceiling Material : 13mm P/Bd to battens 85 Pa
Overhang design assumes structural fascia.

Truss Mark <T2 > 2 Single Trusses
[ ] = # screws @ joints, [ ] = # screws @ gusset Steelfast Truss
All screws 10g 16x16 self drilling hex head

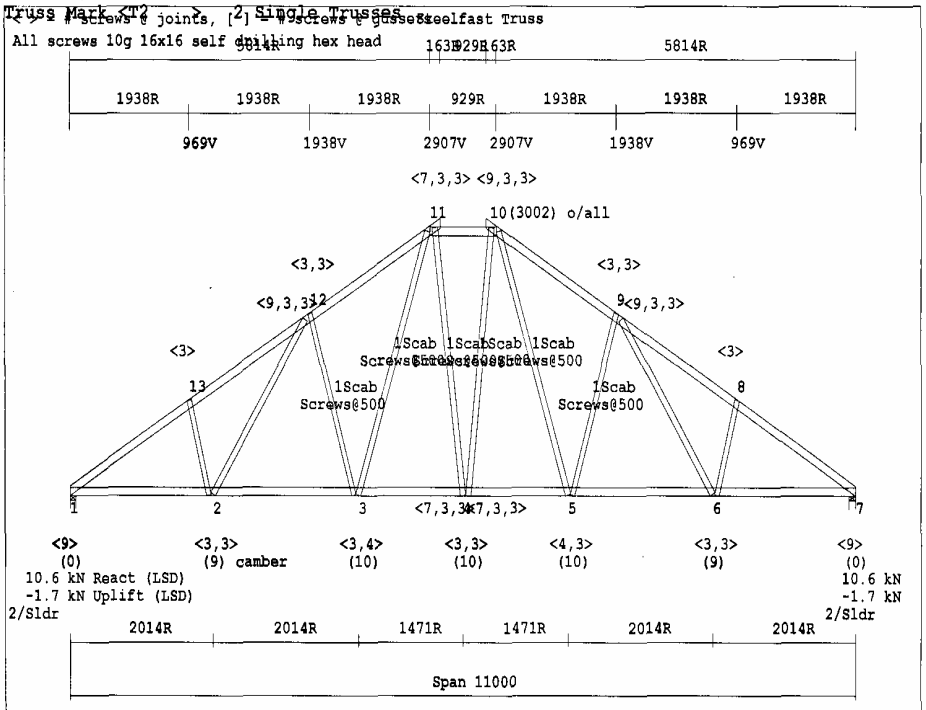

PT Multi Trussindo Perkasa

Setrasari Mal blok B2-44. Bandung 40164 tel: 022-200 1421. fax:201 6715 V

TRUSS DETAIL SHEET Job Ref: TA1

Customer: Tjeptjep Site Addr:

TRUSS DATA	**CHORDS**	**WEBS**
Truss Type : Std	1 6 95G8	u.o.n 65G8
TC pitch 1 : 30.00	6 9 95G10	3 10 75G10
Thickness : 33	1 9 95G10	4 8 75G10
Spacing : 1400		
TC Restraint: 350		
BC Restraint: 2000		

Timber Group: Steelumba
Building Importance : Residential
Roofing Material : Concrete tile-normal 490 Pa
Ceiling Material : 13mm P/Bd to battens 85 Pa
Overhang design assumes structural fascia.
Truss Mark <S1 > 6 Single Trusses

< > = # screws @ joints, [ ] = # screws @ gusset Steelfast Truss
All screws 10g 16x16 self drilling hex head

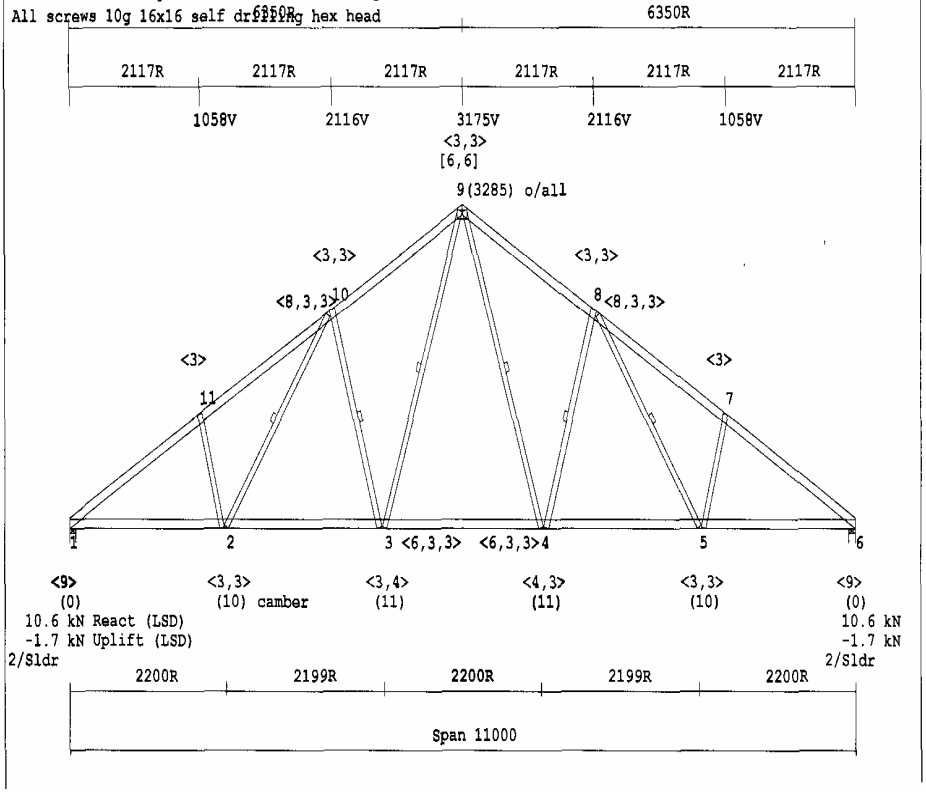

PT Multi Trussindo Perkasa
Setrasari Mal blok B2-44. Bandung 40164 tel: 022-200 1421. fax:201 6715

TRUSS DETAIL SHEET Job Ref: TA1

Customer: Tjeptjep Site Addr:

TRUSS DATA		CHORDS	WEBS
Truss Type	: Jack	1 3 95G8	u.o.n 65G8
TC pitch 1	: 30.00	1 4 95G8	
Station	: 2400		
Thickness	: 33		
Spacing	: 1400		
TC Restraint	: 350		
BC Restraint	: 2000		

Timber Group: Steelumba
Building Importance : Residential
Roofing Material : Concrete tile-normal 490 Pa
Ceiling Material : 13mm P/Bd to battens 85 Pa
Overhang design assumes structural fascia.
Truss Mark <J1 > 12 Single Trusses

< > = # screws @ joints, [ ] = # screws @ gusset&steelfast Truss
All screws 10g 16x16 self drilling hex head

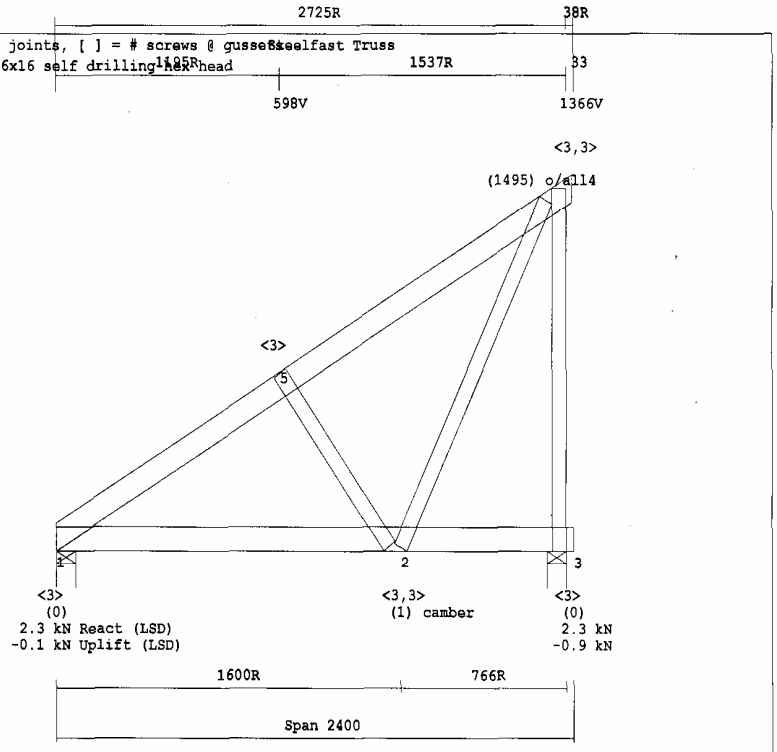

PT Multi Trussindo Perkasa

Setrasari Mal blok B2-44. Bandung 40164 tel: 022-200 1421. fax:201 6715

TRUSS DETAIL SHEET Job Ref: TA1

Customer: Tjeptjep Site Addr:

TRUSS DATA	**CHORDS**	**WEBS**
Truss Type : Hip	1 3 95G8	u.o.n 65G8
TC pitch 1 : 22.21	1 4 95G8	

Thickness : 33
Spacing : 1400
TC Restraint: 350
BC Restraint: 2000
Timber Group: Steelumba
Building Importance : Residential
Roofing Material : Concrete tile-normal 490 Pa
Ceiling Material : 13mm P/Bd to battens 85 Pa
Overhang design assumes structural fascia.

Truss Mark <H1 > 4 Single Trusses

< > = # screws @ joints, [ ] = # screws @ gusset Steelfast Truss
All screws 10g 16x16 self drilling hex head

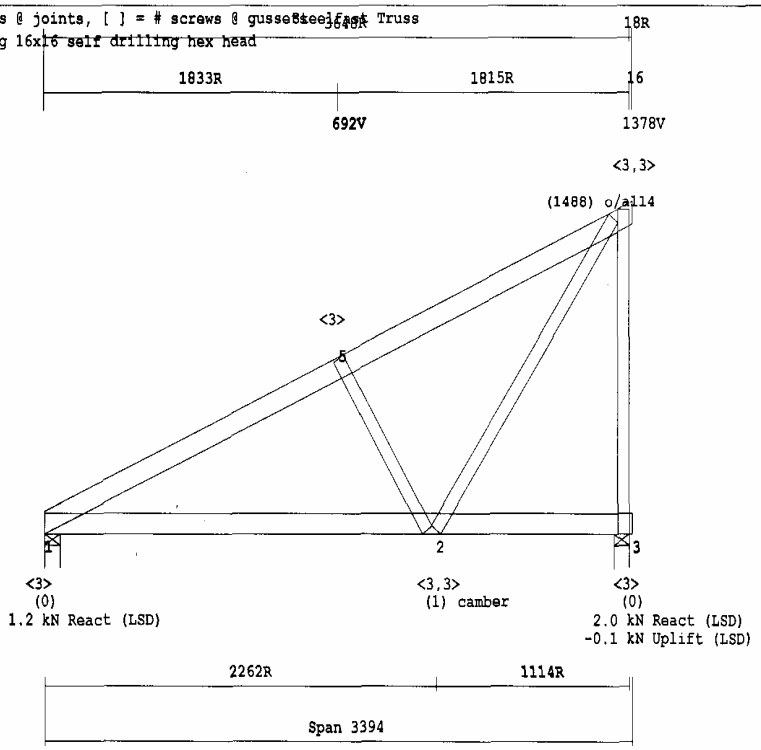

PRYDA INDONESIA PTY. LTD. - Setrasari Mal Blok B2-44 Bandung 40164 Tel : 022-2001 ; 421 Fax : 2016715

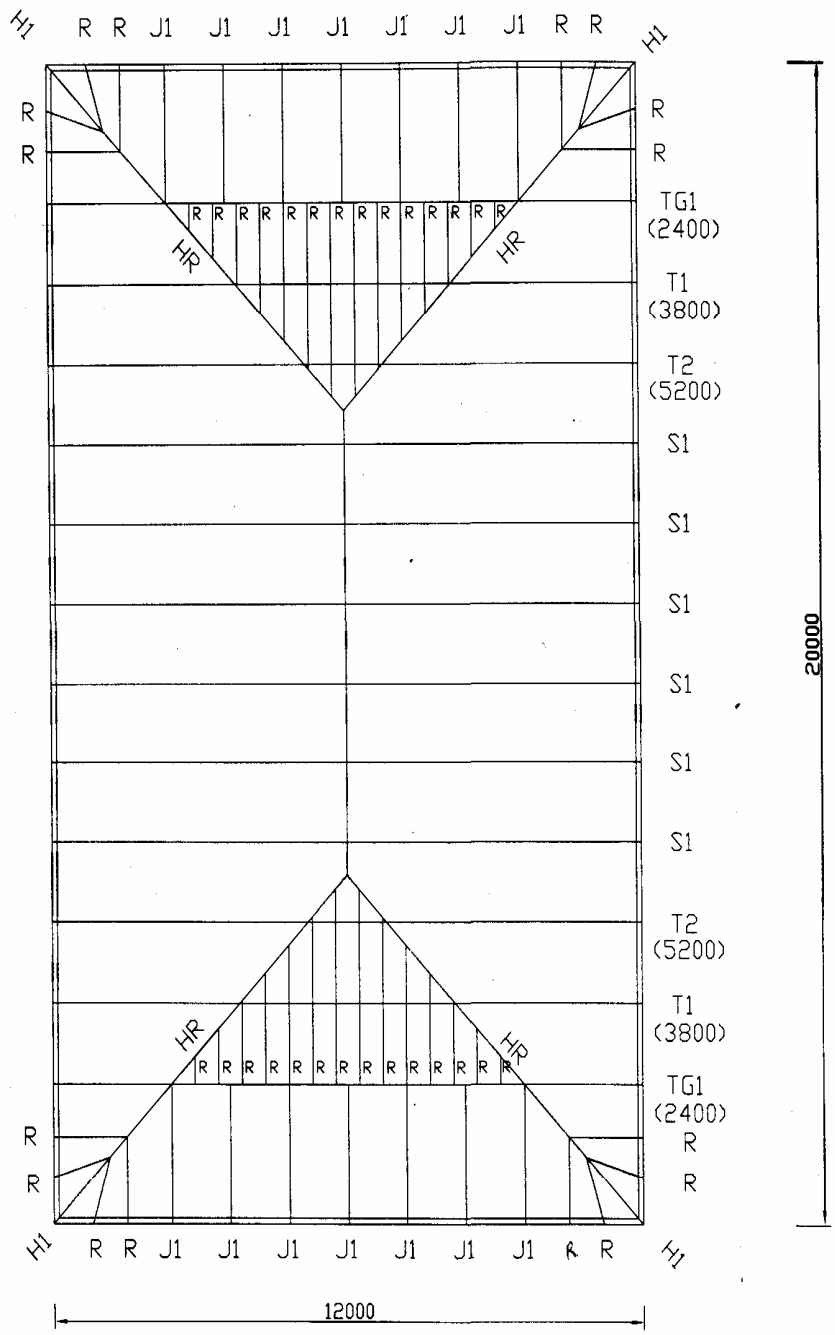

steelfast	JOB REF:	SCALE: 1 : 100	DRAWING TITLE: ROOF LAYOUT	DATE: 22/06/2005	NOTE:
	PROJECT:			PITCH: 30°	
			DESIGNER: Yohanes	ROOFING MATERIAL: Genteng Beton	
			PLAN AREA: 240 m² / ROOF AREA: 277.13 m²	SPACING: 1400 mm	

PT Multi Trussindo Perkasa
Setrasari Mal blok B2-44. Bandung 40164 tel: 022-200 1421. fax:201 6715

TRUSS DETAIL SHEET Job Ref: TA2

Customer: Tjeptjep Site Addr:

TRUSS DATA		**CHORDS**	**WEBS**
Truss Type	: T/Gird	1 11 95G8	u.o.n 65G8
TC pitch 1	: 30.00	11 13 95G10	3 19 75G10
Station	: 2400	13 20 95G10	4 18 75G10
Thickness	: 33	1 20 95G10	8 15 75G10
Spacing	: 1400		9 14 75G10
TC Restraint:	350		==========
BC Restraint:	2000		3 19 75G10 S
			9 14 75G10 S

Timber Group: Steelumba
Building Importance : Residential
Roofing Material : Concrete tile-normal 490 Pa
Ceiling Material : 13mm P/Bd to battens 85 Pa
Overhang design assumes structural fascia.
Truss Mark <TG1 > 2 Single Trusses

< > = # screws @ joints, [ ] = # screws @ gusset Steelfast Truss
All screws 10g 16x16 self drilling hex head

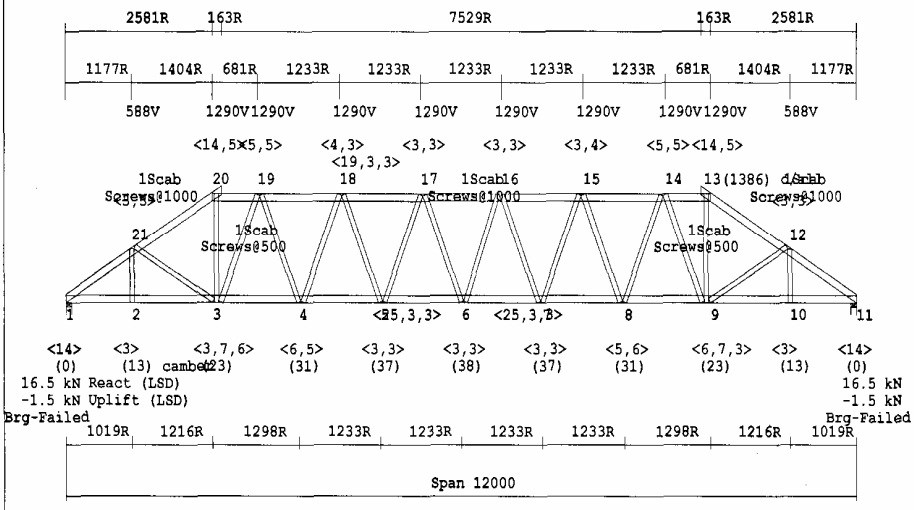

PT Multi Trussindo Perkasa

Setrasari Mal blok B2-44. Bandung 40164 tel: 022-200 1421. fax:201 6715

TRUSS DETAIL SHEET Job Ref: TA2

Customer: Tjeptjep Site Addr:

TRUSS DATA		CHORDS	WEBS	
Truss Type	: T/Std	1 9 95G8	u.o.n 75G10	
TC pitch 1	: 30.00	9 12 95G8	2 17 65G8	
Station	: 3800	12 15 95G10	3 17 65G8	
Thickness	: 33	1 15 95G8	3 16 65G8	
Spacing	: 1400		7 11 65G8	
TC Restraint	: 350		7 10 65G8	
BC Restraint	: 2000		8 10 65G8	
			==========	
			4 14 75G10	S
			6 13 75G10	S

Timber Group: Steelumba
Building Importance : Residential
Roofing Material : Concrete tile-normal 490 Pa
Ceiling Material : 13mm P/Bd to battens 85 Pa
Overhang design assumes structural fascia.

Truss Mark <T1 >, 2 Single Trusses

[ ] = # screws @ joints, [ ] = # screws @ gusset Steelfast Truss

All screws 10g 16x16 self drilling hex head

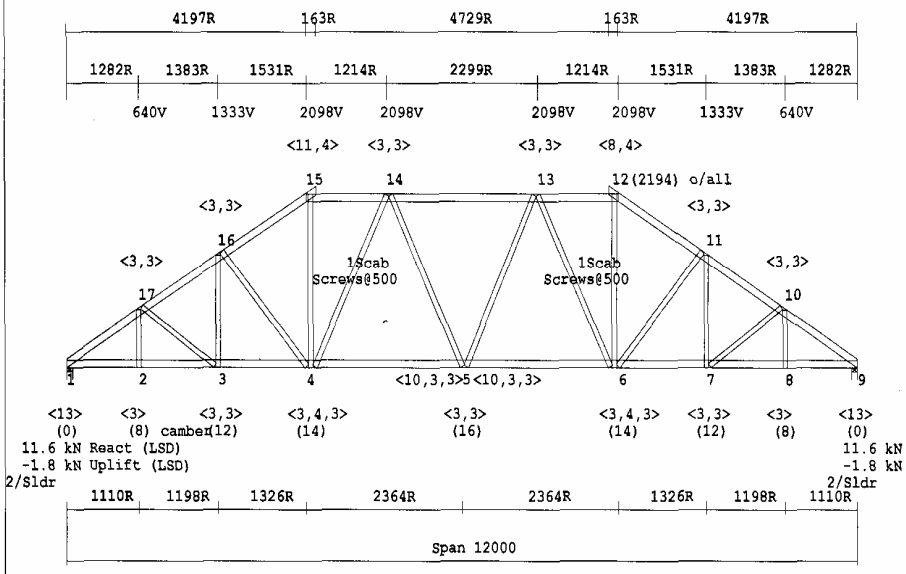

PT Multi Trussindo Perkasa

Setrasari Mal blok B2-44. Bandung 40164 tel: 022-200 1421. fax:201 6715

TRUSS DETAIL SHEET Job Ref: TA2

Customer: Tjeptjep Site Addr:

TRUSS DATA		**CHORDS**	**WEBS**	
Truss Type	: T/Std	1 7 95G8	u.o.n 75G10	
TC pitch 1	: 30.00	7 10 95G10	2 13 65G8	
Station	: 5200	10 11 95G8	6 8 65G8	
Thickness	: 33	1 11 95G10	==========	
Spacing	: 1400		3 11 75G10	S
TC Restraint:	350		4 11 75G10	S
BC Restraint:	2000		4 10 75G10	S
			5 10 75G10	S

Timber Group: Steelumba
Building Importance : Residential
Roofing Material : Concrete tile-normal 490 Pa
Ceiling Material : 13mm P/Bd to battens 85 Pa
Overhang design assumes structural fascia.
Truss Mark <T2 > 2 Single Trusses

< > = # screws @ joints, [ ] = # screws @ gusset Steelfast Truss
All screws 10g 16x16 self drilling hex head

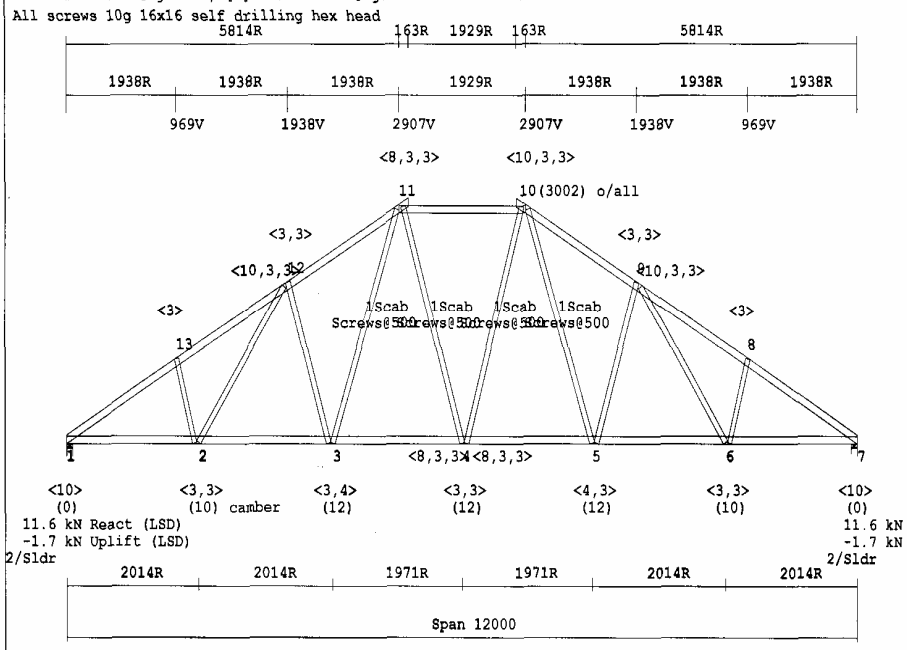

PT Multi Trussindo Perkasa
Setrasari Mal blok B2-44. Bandung 40164 tel: 022-200 1421. fax:201 6715

TRUSS DETAIL SHEET Job Ref: TA2

Customer: Tjeptjep Site Addr:

TRUSS DATA	**CHORDS**	**WEBS**
Truss Type : Std	1 6 95G8	u.o.n 75G10
TC pitch 1 : 30.00	6 9 95G10	2 11 65G8
Thickness : 33	1 9 95G10	2 10 65G8
Spacing : 1400		5 8 65G8
TC Restraint: 350		5 7 65G8

BC Restraint: 2000
Timber Group: Steelumba
Building Importance : Residential
Roofing Material : Concrete tile-normal 490 Pa
Ceiling Material : 13mm P/Bd to battens 85 Pa
Overhang design assumes structural fascia.
Truss Mark <S1 > 6 Single Trusses

< > = # screws @ joints, [ ] = # screws @ gusset Steelfast Truss
All screws 10g 16x16 self drilling hex head

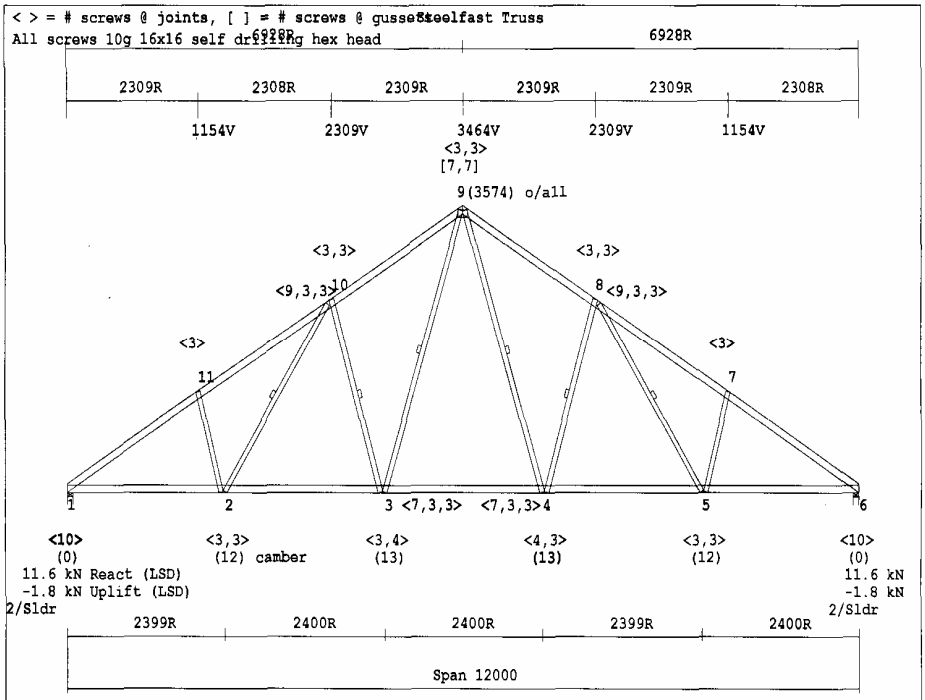

PT Multi Trussindo Perkasa

Setrasari Mal blok B2-44. Bandung 40164 tel: 022-200 1421. fax:201 6715

TRUSS DETAIL SHEET Job Ref: TA2

Customer: Tjeptjep Site Addr:

TRUSS DATA	**CHORDS**	**WEBS**
Truss Type : Jack	1 3 95G8	u.o.n 65G8
TC pitch 1 : 30.00	1 4 95G8	
Station : 2400		
Thickness : 33		
Spacing : 1400		
TC Restraint: 350		
BC Restraint: 2000		

Timber Group: Steelumba
Building Importance : Residential
Roofing Material : Concrete tile-normal 490 Pa
Ceiling Material : 13mm P/Bd to battens 85 Pa
Overhang design assumes structural fascia.

Truss Mark <J1 > 14 Single Trusses

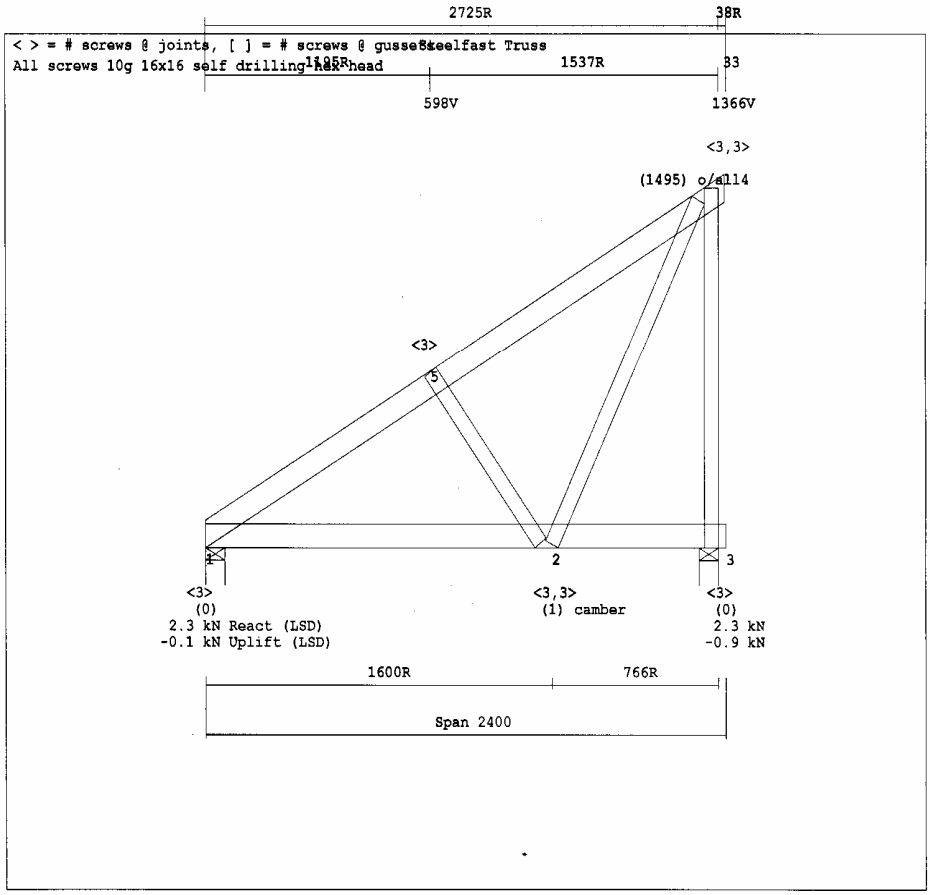

PT Multi Trussindo Perkasa
Setrasari Mal blok B2-44. Bandung 40164 tel: 022-200 1421. fax:201 6715

TRUSS DETAIL SHEET Job Ref: TA2

Customer: Tjeptjep **Site Addr:**

TRUSS DATA	**CHORDS**	**WEBS**
Truss Type : Hip	1 3 95G8	u.o.n 65G8
TC pitch 1 : 22.21	1 4 95G8	
Thickness : 33		
Spacing : 1400		
TC Restraint: 350		
BC Restraint: 2000		
Timber Group: Steelumba		

Building Importance : Residential
Roofing Material : Concrete tile-normal 490 Pa
Ceiling Material : 13mm P/Bd to battens 85 Pa
Overhang design assumes structural fascia.
Truss Mark <H1 > 4 Single Trusses

< > = # screws @ joints, [ ] = # screws @ gusset Steelfast Truss
All screws 10g 16x16 self drilling hex head

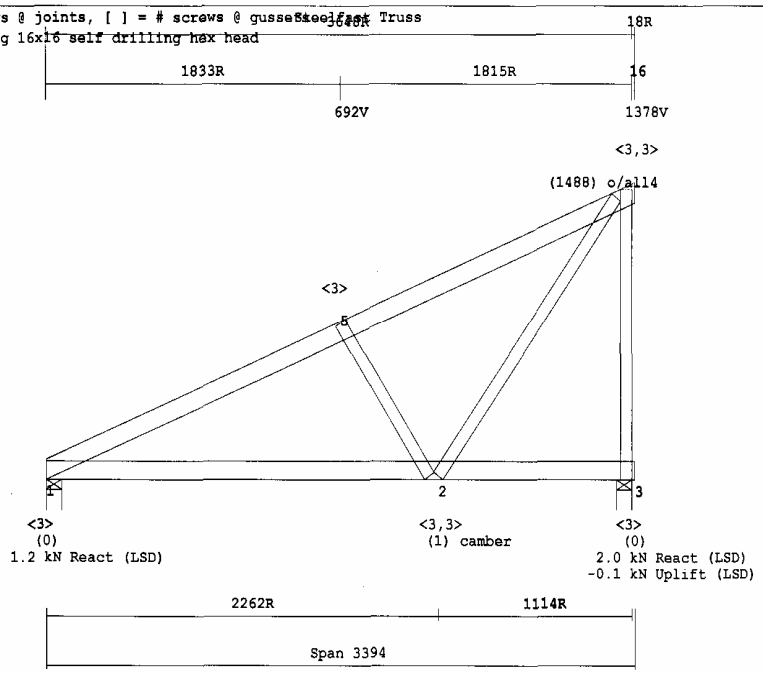

PRYDA INDONESIA PTY. LTD. - Setrasari Mal Blok B2-44 Bandung 40164 Tel : 022-2001 ; 421 Fax : 2016715

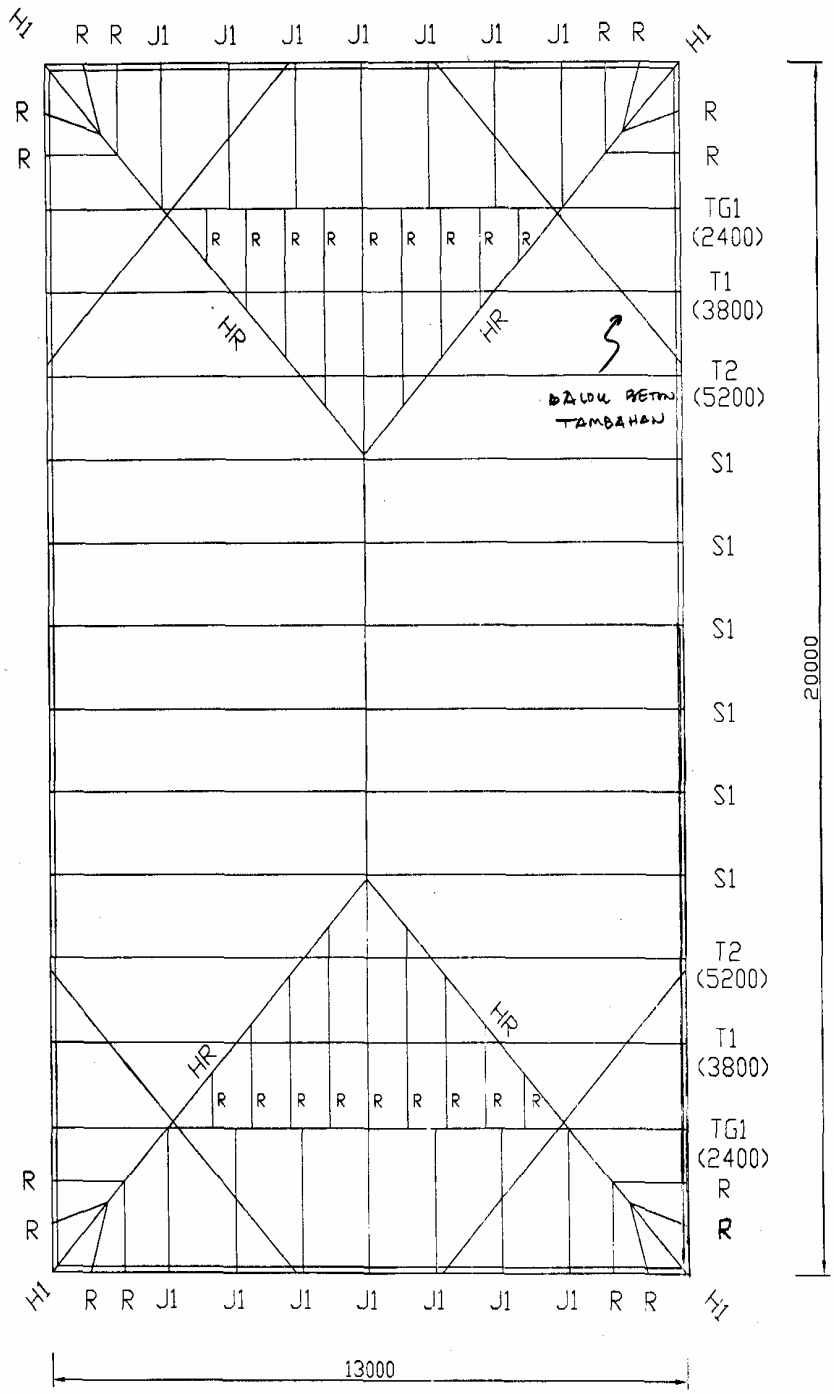

steelfast

JOB REF :	SCALE : 1 : 100	DRAWING TITLE : ROOF LAYOUT	DATE : 27/05/2005	NOTE :
PROJECT :		DESIGNER : Yohanes	PITCH : 30°	
			ROOFING MATERIAL : Genteng Beton	
		PLAN AREA : 260 m² / ROOF AREA : 300.21 m²	SPACING : 1400 mm	

PT Multi Trussindo Perkasa

Setrasari Mal blok B2-44. Bandung 40164 tel: 022-200 1421. fax:201 6715 V

TRUSS DETAIL SHEET Job Ref: TA8

Customer: Tjeptjep Site Addr:

TRUSS DATA		CHORDS	WEBS	
Truss Type	: T/Gird	1 9 95G8	u.o.n 65G8	
TC pitch 1	: 30.00	9 11 95G8	3 16 75G10	
Station	: 2400	11 16 95G8	3 15 75G10	
Thickness	: 33	1 16 95G8	4 14 75G10	
Spacing	: 1400		6 13 75G10	
TC Restraint:	350		7 12 75G10	
BC Restraint:	2000		7 11 75G10	
			==========	
			3 15 75G10	S
			7 12 75G10	S

Timber Group: Steelumba
Building Importance : Residential
Roofing Material : Concrete tile-normal 490 Pa
Ceiling Material : 13mm P/Bd to battens 85 Pa
Overhang design assumes structural fascia.

Truss Mark <TG1 > 2 Single Trusses
<> = # screws @ joints, [] = # screws @ gusset Steelfast Truss
All screws 10g 16x16 self drilling hex head

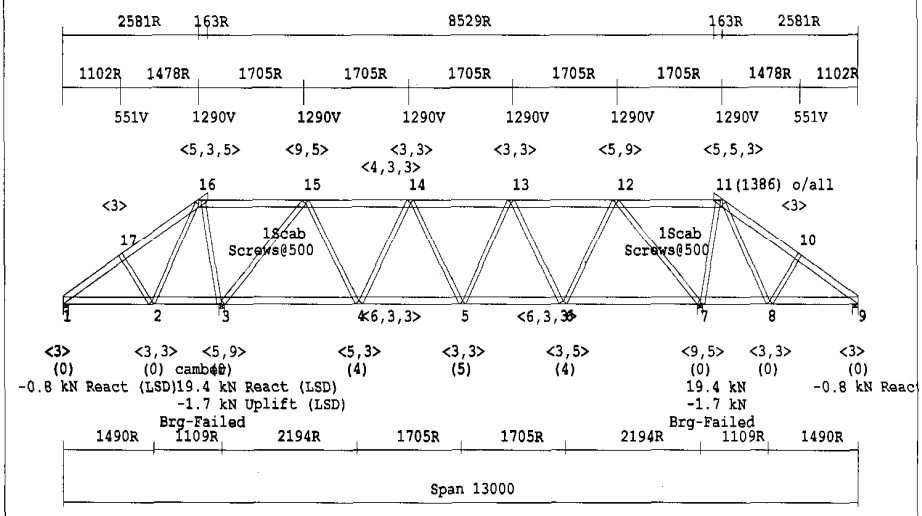

PT Multi Trussindo Perkasa

Setrasari Mal blok B2-44. Bandung 40164 tel: 022-200 1421. fax:201 6715

TRUSS DETAIL SHEET Job Ref: TA8

Customer: Tjeptjep Site Addr:

TRUSS DATA		CHORDS	WEBS		
Truss Type	: T/Std	1 9 95G8	u.o.n 75G10	8 11 75G10	S
TC pitch 1	: 30.00	9 12 95G8	2 17 65G8		
Station	: 3800	12 15 95G10	3 16 65G8		
Thickness	: 33	1 15 95G8	6 13 65G8		
Spacing	: 1400		7 11 65G8		
TC Restraint:	350		8 10 65G8		
BC Restraint:	2000		==========		
			2 16 75G10	S	
			4 14 75G10	S	
			6 13 65G8	S	

Timber Group: Steelumba
Building Importance : Residential
Roofing Material : Concrete tile-normal 490 Pa
Ceiling Material : 13mm P/Bd to battens 85 Pa
Overhang design assumes structural fascia.

Truss Mark <T1 > 2 Single Trusses
<> = # screws @ joints, [] = # screws @ gusset Steelfast Truss
All screws 10g 16x16 self drilling hex head

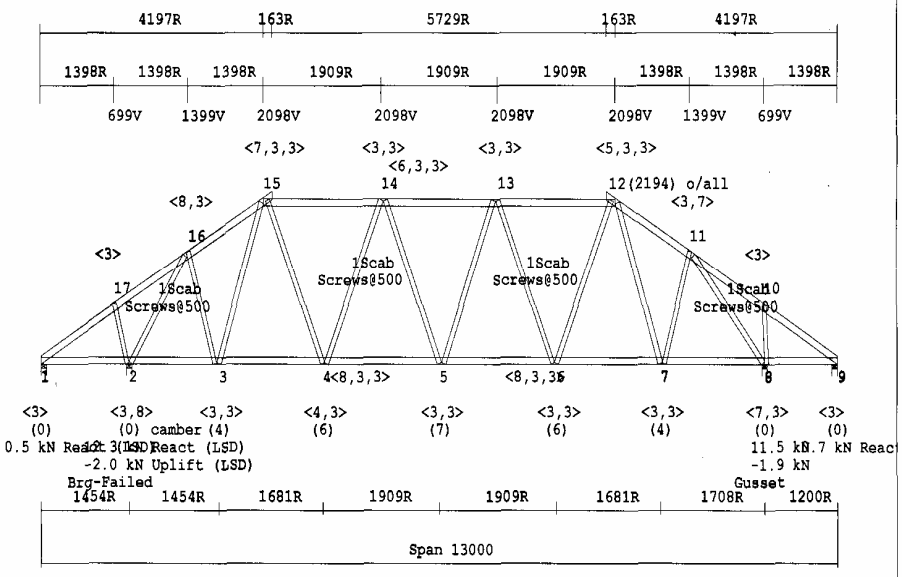

PT Multi Trussindo Perkasa

Setrasari Mal blok B2-44. Bandung 40164 tel: 022-200 1421. fax:201 6715

TRUSS DETAIL SHEET Job Ref: TA8

Customer: Tjeptjep Site Addr:

TRUSS DATA		CHORDS	WEBS	
Truss Type	: T/Std	1 8 95G8	u.o.n 75G10	
TC pitch 1	: 30.00	8 11 95G10	2 15 65G8	
Station	: 5200	11 13 95G8	7 9 65G8	
Thickness	: 33	1 13 95G10	==========	
Spacing	: 1400		3 13 75G10	S
TC Restraint:	350		4 13 75G10	S
BC Restraint:	2000		4 12 75G10	S
			5 12 75G10	S
			5 11 75G10	S
			6 11 75G10	S

Timber Group: Steelumba
Building Importance : Residential
Roofing Material : Concrete tile-normal 490 Pa
Ceiling Material : 13mm P/Bd to battens 85 Pa
Overhang design assumes structural fascia.

Truss Mark <T2 > 2 Single Trusses

<1> = # screws @ joints, [2] = # screws @ gusset Steelfast Truss

All screws 10g 16x16 self drilling hex head

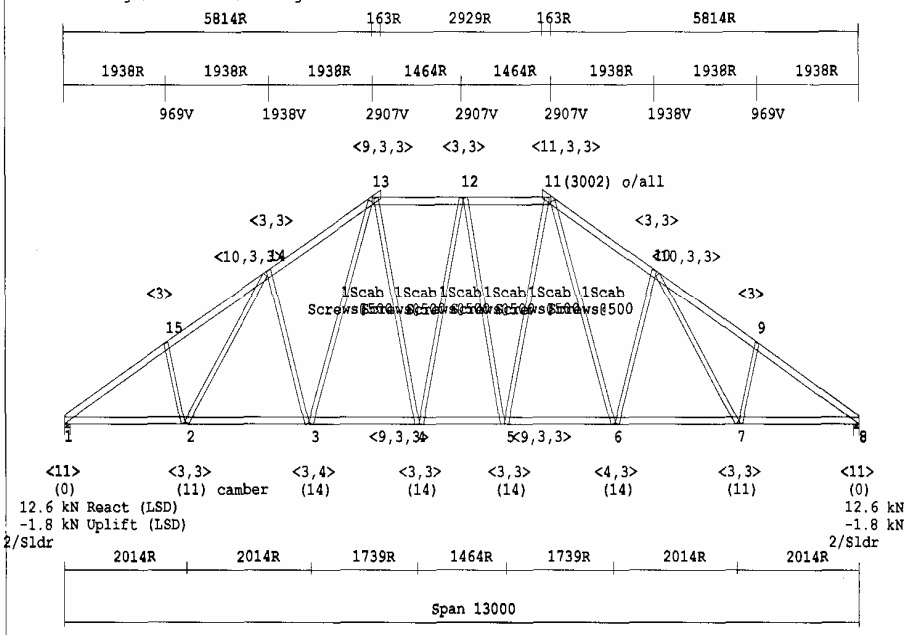

PT Multi Trussindo Perkasa
Setrasari Mal blok B2-44. Bandung 40164 tel: 022-200 1421. fax:201 6715

TRUSS DETAIL SHEET Job Ref: TA8

Customer: Tjeptjep Site Addr:

TRUSS DATA	**CHORDS**	**WEBS**
Truss Type : Std	1 8 95G8	u.o.n 65G8
TC pitch 1 : 30.00	8 12 95G10	4 13 75G10
Thickness : 33	1 12 95G10	4 12 75G10
Spacing : 1400		5 12 75G10
TC Restraint: 350		5 11 75G10
BC Restraint: 2000		

Timber Group: Steelumba
Building Importance : Residential
Roofing Material : Concrete tile-normal 490 Pa
Ceiling Material : 13mm P/Bd to battens 85 Pa
Overhang design assumes structural fascia.
Truss Mark <S1 > 6 Single Trusses

< > = # screws @ joints, [ ] = # screws @ gusset Steelfast Truss
All screws 10g 16x16 self drilling hex head

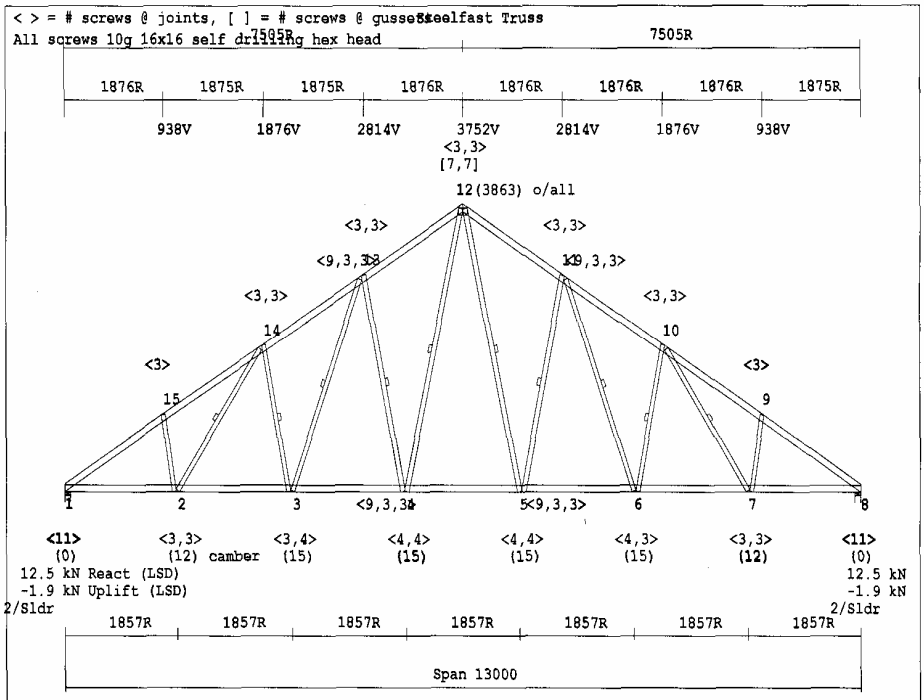

PT Multi Trussindo Perkasa

Setrasari Mal blok B2-44. Bandung 40164 tel: 022-200 1421. fax:201 6715

TRUSS DETAIL SHEET Job Ref: TA8

Customer: Tjeptjep Site Addr:

TRUSS DATA	**CHORDS**	**WEBS**
Truss Type : Jack	1 3 95G8	u.o.n 65G8
TC pitch 1 : 30.00	1 4 95G8	
Station : 2400		
Thickness : 33		
Spacing : 1400		
TC Restraint: 350		
BC Restraint: 2000		

Timber Group: Steelumba
Building Importance : Residential
Roofing Material : Concrete tile-normal 490 Pa
Ceiling Material : 13mm P/Bd to battens 85 Pa
Overhang design assumes structural fascia.

Truss Mark <J1 > 14 Single Trusses

< > = # screws @ joints, [ ] = # screws @ gusset&steelfast Truss
All screws 10g 16x16 self drilling hex head

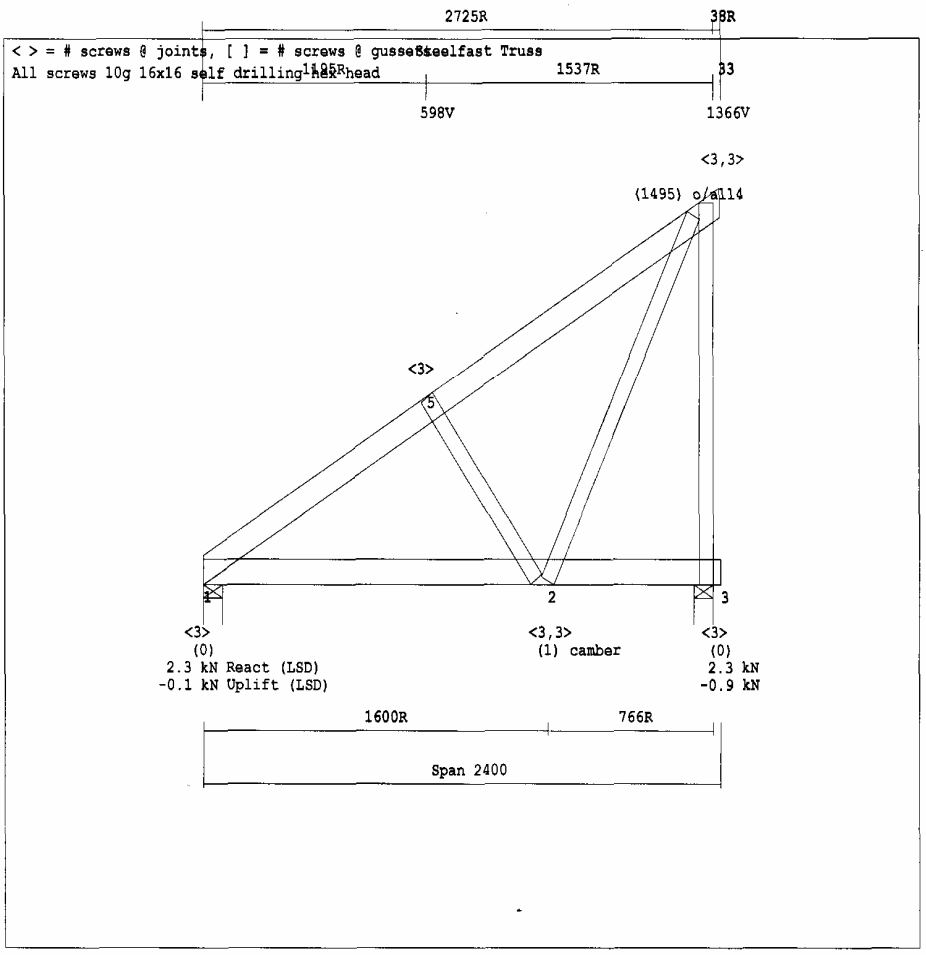

PT Multi Trussindo Perkasa
Setrasari Mal blok B2-44. Bandung 40164 tel: 022-200 1421. fax:201 6715

TRUSS DETAIL SHEET Job Ref: TA8

Customer: Tjeptjep **Site Addr:**

TRUSS DATA	**CHORDS**	**WEBS**
Truss Type : Hip	1 3 95G8	u.o.n 65G8
TC pitch 1 : 22.21	1 4 95G8	
Thickness : 33		
Spacing : 1400		
TC Restraint: 350		
BC Restraint: 2000		

Timber Group: Steelumba
Building Importance : Residential
Roofing Material : Concrete tile-normal 490 Pa
Ceiling Material : 13mm P/Bd to battens 85 Pa
Overhang design assumes structural fascia.
Truss Mark <H1 > 4 Single Trusses

< > = # screws @ joints, [ ] = # screws @ gusset Steelfast Truss
All screws 10g 16x16 self drilling hex head

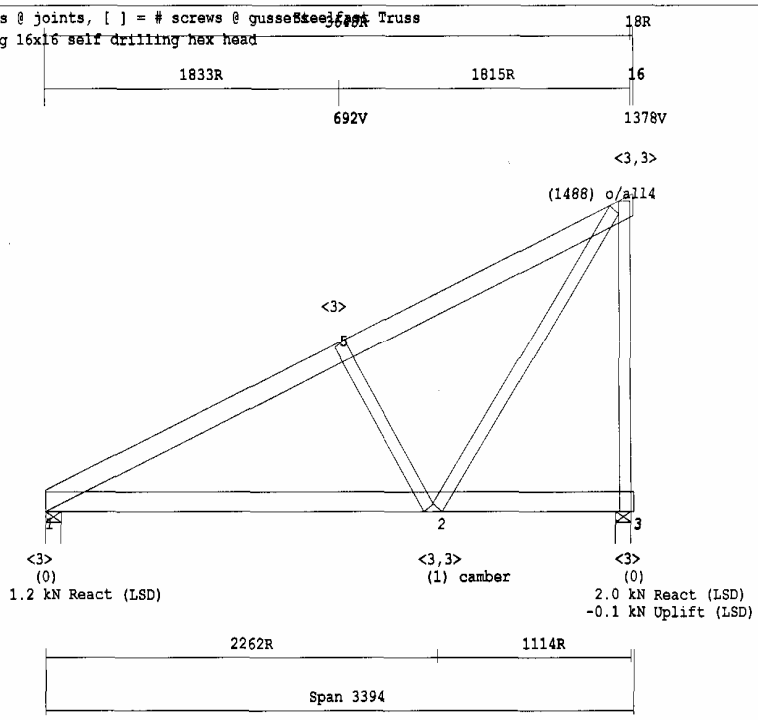

PRYDA INDONESIA PTY. LTD. - Setrasari Mal Blok B2-44 Bandung 40164 Tel : 022-2001 ; 421 Fax : 2016715

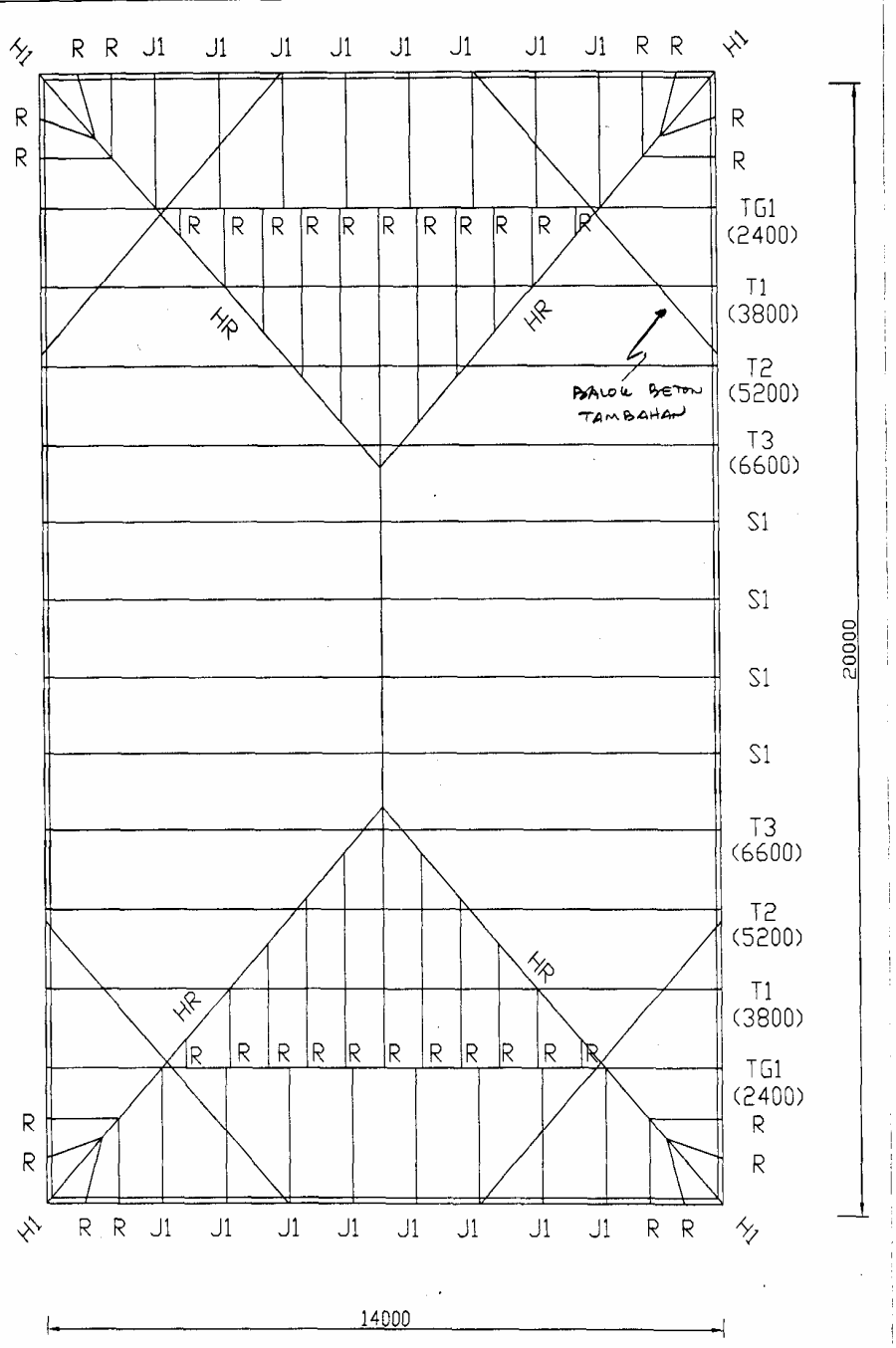

steelfast	JOB REF :	SCALE : 1 : 100	DRAWING TITLE : ROOF LAYOUT	DATE : 23/08/2005	NOTE :
	PROJECT :			PITCH : 30°	
			DESIGNER : Yohanes	ROOFING MATERIAL : Genteng Beton	
			PLAN AREA : 280 m² / ROOF AREA : 323.32 m²	SPACING : 1400 mm	

PT Multi Trussindo Perkasa
Setrasari Mal blok B2-44. Bandung 40164 tel: 022-200 1421. fax:201 6715

TRUSS DETAIL SHEET Job Ref: TA9

Customer: Tjeptjep Site Addr:

TRUSS DATA		CHORDS	WEBS		
Truss Type	: T/Gird	1 9 95G10	u.o.n 65G8	7 12 75G10	S
TC pitch 1	: 30.00	9 11 95G8	3 16 75G10	7 11 75G10	S
Station	: 2400	11 16 95G8	3 15 75G10		
Thickness	: 33	1 16 95G8	4 14 75G10		
Spacing	: 1400		6 13 75G10		
TC Restraint	: 350		7 12 75G10		
BC Restraint	: 2000		7 11 75G10		
			==========		
			3 16 75G10	S	
			3 15 75G10	S	

Timber Group: Steelumba
Building Importance : Residential
Roofing Material : Concrete tile-normal 490 Pa
Ceiling Material : 13mm P/Bd to battens 85 Pa
Overhang design assumes structural fascia.

Truss Mark <TG1 > 2 Single Trusses
< > = # screws @ joints, [ ] = # screws @ gusset Steelfast Truss
All screws 10g 16x16 self drilling hex head

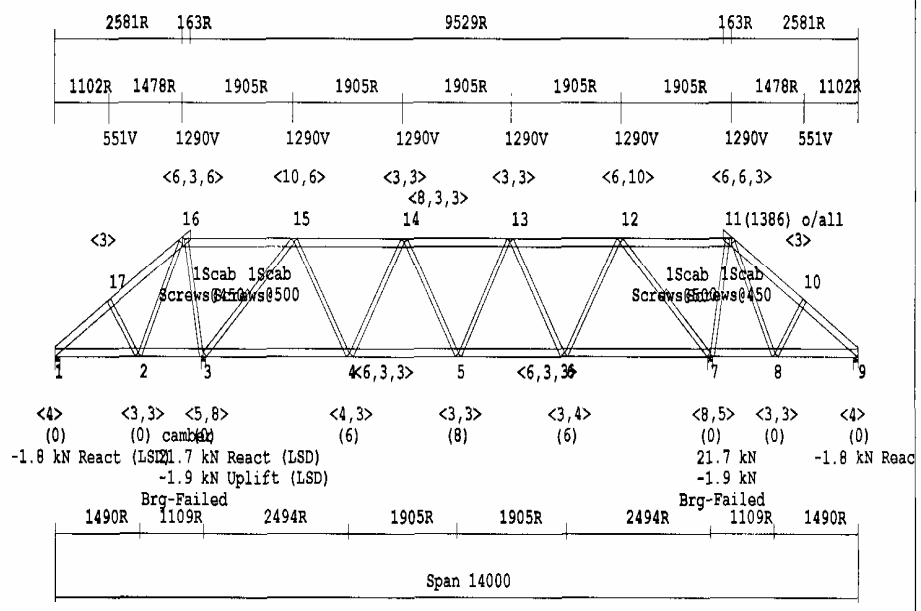

PT Multi Trussindo Perkasa
Setrasari Mal blok B2-44. Bandung 40164 tel: 022-200 1421. fax:201 6715

TRUSS DETAIL SHEET Job Ref: TA9

Customer: Tjeptjep Site Addr:

TRUSS DATA		CHORDS	WEBS	
Truss Type	: T/Std	1 9 95G8	u.o.n 75G10	
TC pitch 1	: 30.00	9 12 95G8	2 17 65G8	
Station	: 3800	12 15 95G10	3 16 65G8	
Thickness	: 33	1 15 95G8	7 11 65G8	
Spacing	: 1400		8 10 65G8	
TC Restraint:	350		==========	
BC Restraint:	2000		2 16 75G10	S
			4 14 75G10	S
			6 13 75G10	S
			8 11 75G10	S

Timber Group: Steelumba
Building Importance : Residential
Roofing Material : Concrete tile-normal 490 Pa
Ceiling Material : 13mm P/Bd to battens 85 Pa
Overhang design assumes structural fascia.

Truss Mark <T1 > 2 Single Trusses
<> = # screws @ joints, [] = # screws @ gusset Steelfast Truss
All screws 10g 16x16 self drilling hex head

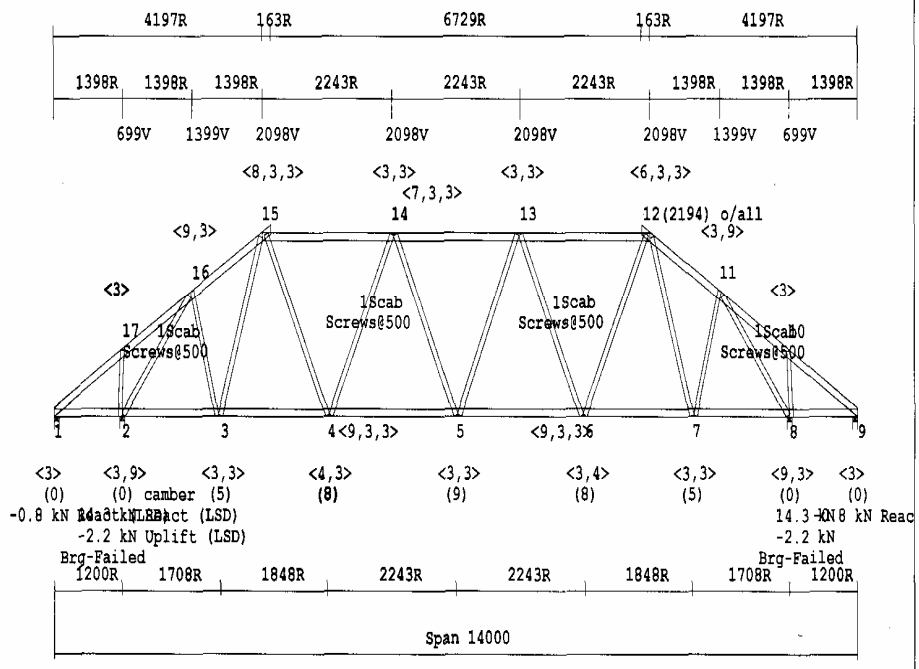

PT Multi Trussindo Perkasa
Setrasari Mal blok B2-44. Bandung 40164 tel: 022-200 1421. fax:201 6715

TRUSS DETAIL SHEET Job Ref: TA9

Customer: Tjeptjep Site Addr:

TRUSS DATA		CHORDS	WEBS	
Truss Type	: T/Std	1 8 95G8	u.o.n 75G10	
TC pitch 1	: 30.00	8 11 95G10	2 15 65G8	
Station	: 5200	11 13 95G10	7 9 65G8	
Thickness	: 33	1 13 95G10	==========	
Spacing	: 1400		3 13 75G10	S
TC Restraint:	350		4 13 75G10	S
BC Restraint:	2000		4 12 75G10	S
			5 12 75G10	S
			5 11 75G10	S
			6 11 75G10	S

Timber Group: Steelumba
Building Importance : Residential
Roofing Material : Concrete tile-normal 490 Pa
Ceiling Material : 13mm P/Bd to battens 85 Pa
Overhang design assumes structural fascia.

Truss Mark <T2 >, 2 Single Trusses
<> = # screws @ joints, [] = # screws @ gusset Steelfast Truss
All screws 10g 16x16 self drilling hex head

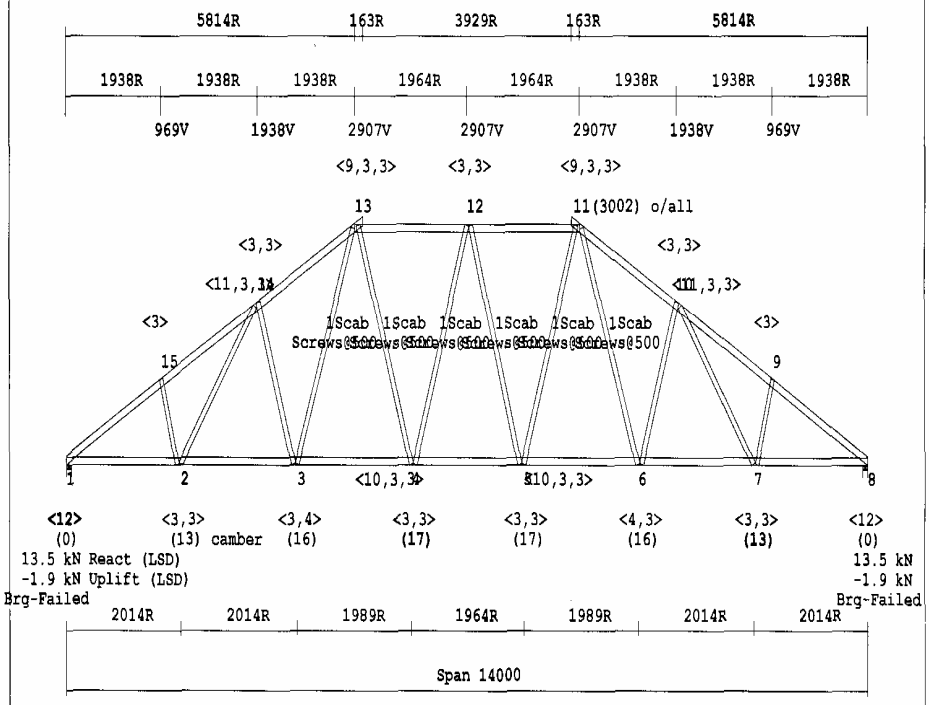

PT Multi Trussindo Perkasa
Setrasari Mal blok B2-44. Bandung 40164 tel: 022-200 1421. fax:201 6715

TRUSS DETAIL SHEET Job Ref: TA9

Customer: Tjeptjep Site Addr:

TRUSS DATA		CHORDS	WEBS		
Truss Type	: T/Std	1 9 95G8	u.o.n 75G10	6 12 75G10	S
TC pitch 1	: 30.00	9 13 95G10	2 17 65G8	7 12 75G10	S
Station	: 6600	13 14 95G8	8 10 65G8		
Thickness	: 33	1 14 95G10	==========		
Spacing	: 1400		3 15 75G10 S		
TC Restraint:	350		4 15 75G10 S		
BC Restraint:	2000		4 14 75G10 S		
			5 14 75G10 S		
			5 13 75G10 S		
			6 13 75G10 S		

Timber Group: Steelumba
Building Importance : Residential
Roofing Material : Concrete tile-normal 490 Pa
Ceiling Material : 13mm P/Bd to battens 85 Pa
Overhang design assumes structural fascia.

Truss Mark <T3 > [2] Single Trusses

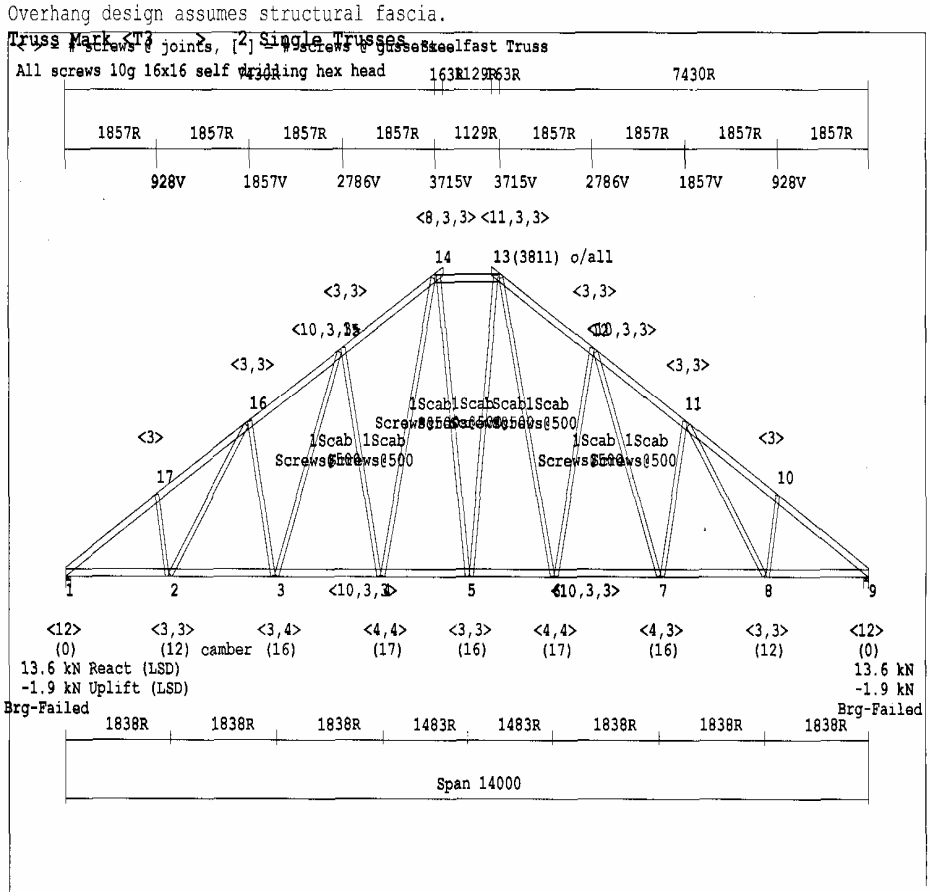

PT Multi Trussindo Perkasa

Setrasari Mal blok B2-44. Bandung 40164 tel: 022-200 1421. fax:201 6715 V

TRUSS DETAIL SHEET Job Ref: TA9

Customer: Tjeptjep Site Addr:

TRUSS DATA	**CHORDS**	**WEBS**	
Truss Type : Std	1 8 95G8	u.o.n 65G8	
TC pitch 1 : 30.00	8 12 95G10	4 12 75G10	
Thickness : 33	1 12 95G10	5 12 75G10	
Spacing : 1400		==========	
TC Restraint: 350		4 13 65G8	S
BC Restraint: 2000		5 11 65G8	S

Timber Group: Steelumba
Building Importance : Residential
Roofing Material : Concrete tile-normal 490 Pa
Ceiling Material : 13mm P/Bd to battens 85 Pa
Overhang design assumes structural fascia.
Truss Mark <S1 > 4 Single Trusses

< > = # screws @ joints, [ ] = # screws @ gusset Steelfast Truss
All screws 10g 16x16 self drilling hex head

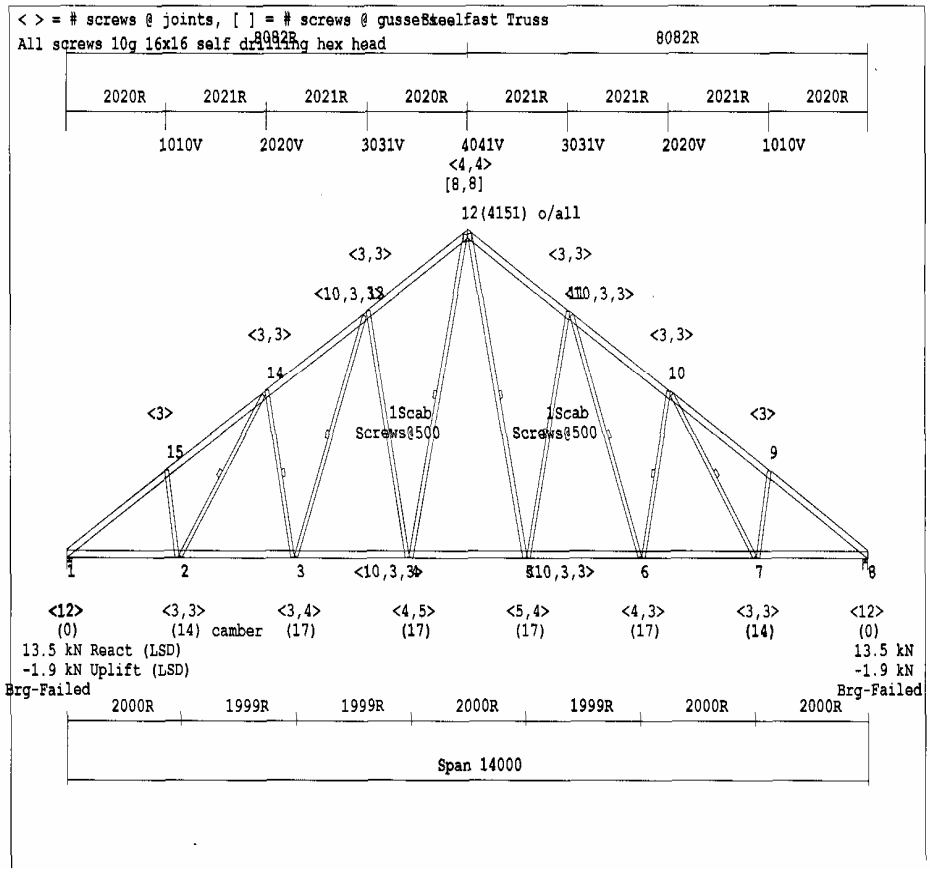

PT Multi Trussindo Perkasa
Setrasari Mal blok B2-44. Bandung 40164 tel: 022-200 1421. fax:201 6715

TRUSS DETAIL SHEET Job Ref: TA9

Customer: Tjeptjep Site Addr:

TRUSS DATA	**CHORDS**	**WEBS**
Truss Type : Jack	1 3 95G8	u.o.n 65G8
TC pitch 1 : 30.00	1 4 95G8	
Station : 2400		
Thickness : 33		
Spacing : 1400		
TC Restraint: 350		
BC Restraint: 2000		

Timber Group: Steelumba
Building Importance : Residential
Roofing Material : Concrete tile-normal 490 Pa
Ceiling Material : 13mm P/Bd to battens 85 Pa
Overhang design assumes structural fascia.
Truss Mark <J1 > 16 Single Trusses

< > = # screws @ joints, [ ] = # screws @ gusset Steelfast Truss
All screws 10g 16x16 self drilling hex head

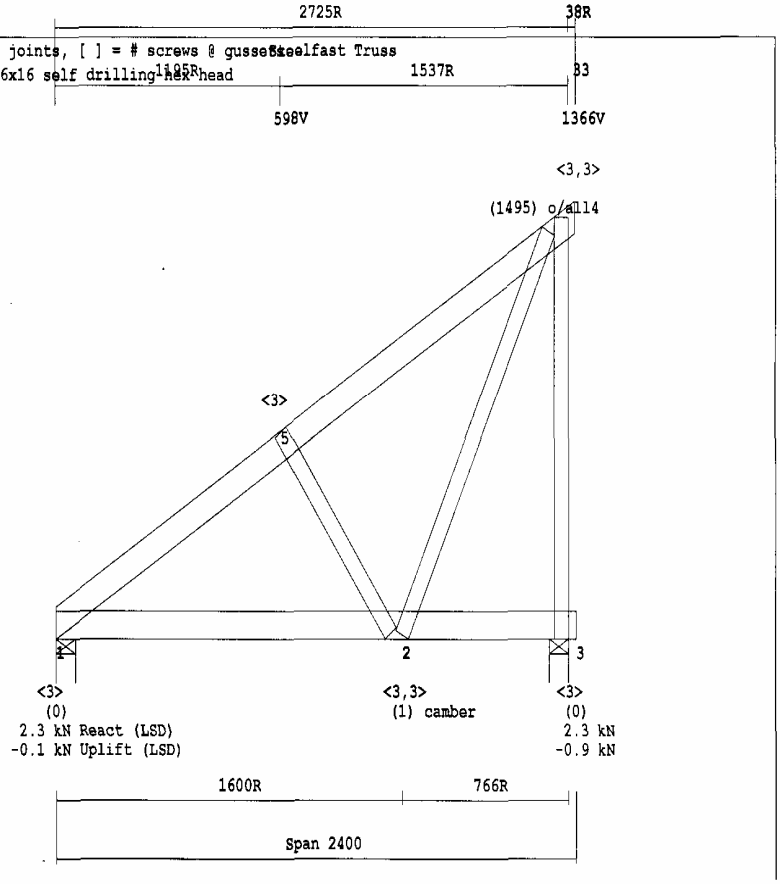

PT Multi Trussindo Perkasa
Setrasari Mal blok B2-44. Bandung 40164 tel: 022-200 1421. fax:201 6715

TRUSS DETAIL SHEET Job Ref: TA9

Customer: Tjeptjep Site Addr:

TRUSS DATA	CHORDS	WEBS
Truss Type : Hip	1 3 95G8	u.o.n 65G8
TC pitch 1 : 22.21	1 4 95G8	

Thickness : 33
Spacing : 1400
TC Restraint: 350
BC Restraint: 2000
Timber Group: Steelumba
Building Importance : Residential
Roofing Material : Concrete tile-normal 490 Pa
Ceiling Material : 13mm P/Bd to battens 85 Pa
Overhang design assumes structural fascia.
Truss Mark <H1 > 4 Single Trusses

< > = # screws @ joints, [ ] = # screws @ gusset Steelfast Truss
All screws 10g 16x16 self drilling hex head

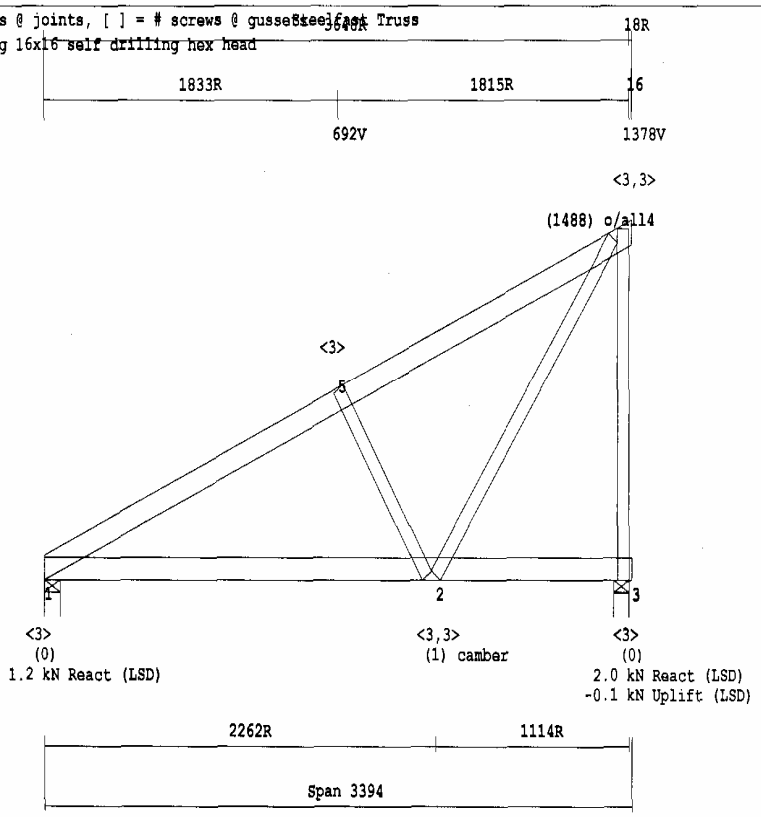

Lampiran 2

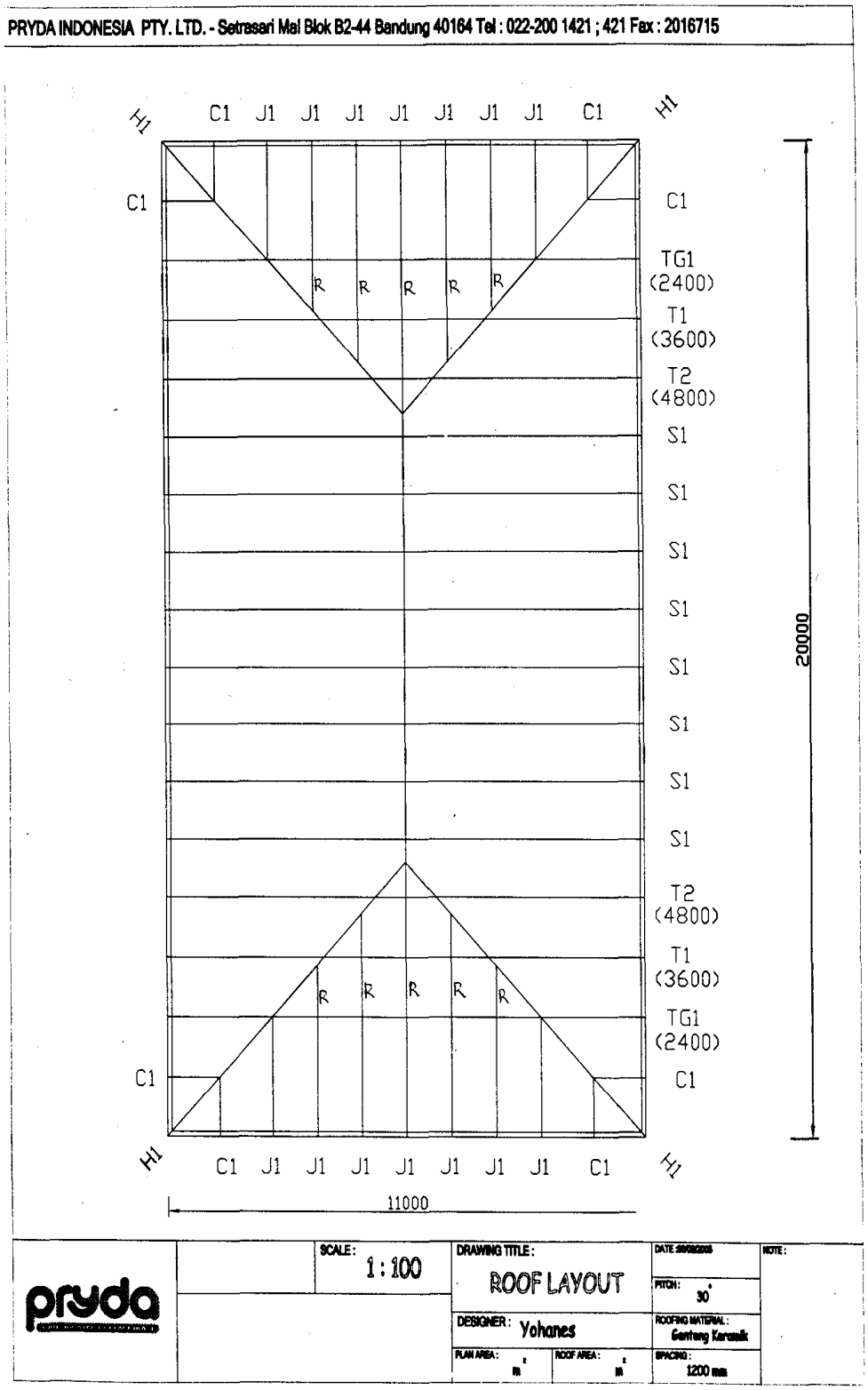
PRYDA INDONESIA PTY. LTD. - Setrasari Mal Blok B2-44 Bandung 40164 Tel : 022-200 1421 ; 421 Fax : 2016715
H1
C1 J1 J1 J1 J1 J1 J1 J1 C1
C1
TG1 (2400)
T1 (3600)
T2 (4800)
S1
R
20000
11000
pryda
SCALE: 1 : 100
DRAWING TITLE: ROOF LAYOUT
DESIGNER: Yohanes
PITCH: 30°
ROOFING MATERIAL: Genteng Keramik
SPACING: 1200 mm
NOTE:

PT Multi Trussindo Perkasa 1:17pm 10 JUN 2005

Setrasari Mal blok B2-44. Bandung 40164 tel: 022-200 1421. fax:201 6715 Ver 3.4.2.0 PAGE 1

TRUSS DETAIL SHEET Job Ref: TA4

Customer: Tjeptjep Site Addr:

TRUSS DATA		CHORDS		WEBS	
Truss Type	: T/Gird	1 8 95F14VGH	J2	u.o.n 65F14VGH	J2
TC pitch 1	: 30.00	8 10 95F14VGH	J2		
Station	: 2400	10 14 95F14VGH	J2		
Thickness	: 35	1 14 95F14VGH	J2		
Spacing	: 1200				
TC Restraint	: 350				
BC Restraint	: 1500				

Timber Group: Kempas-2

Roofing Material : Concrete tile-normal 490 Pa

Ceiling Material : 13mm P/Bd to battens 85 Pa

Overhang design assumes structural fascia.

Nailing: Use 3.15 dia. hand hammered or 2.9 dia. power driven nails. u.o.n 1 Row@250 crs

Truss Mark <TG1 > 2 Double Trusses

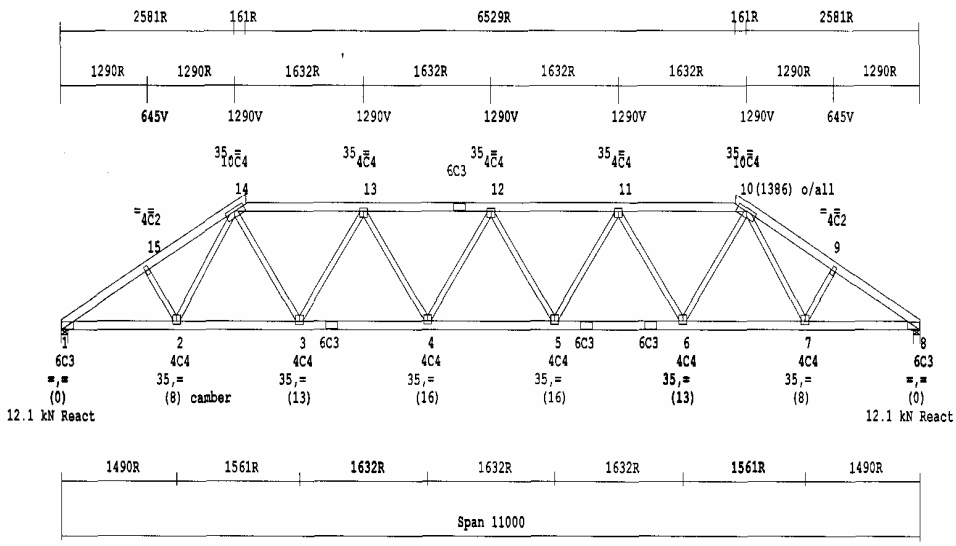

PT Multi Trussindo Perkasa 1:17pm 10 JUN 2005

Setrasari Mal blok B2-44. Bandung 40164 tel: 022-200 1421. fax:201 6715 Ver 3.4.2.0 PAGE 2

TRUSS DETAIL SHEET Job Ref: TA4

Customer: Tjeptjep Site Addr:

TRUSS DATA		**CHORDS**		**WEBS**	
Truss Type	: T/Std	1 6 95F14VGH	J2	u.o.n 95F14VGH	J2
TC pitch 1	: 30.00	6 8 95F14VGH	J2	2 11 65F14VGH	J2
Station	: 3600	8 10 95F14VGH	J2	5 7 65F14VGH	J2
Thickness	: 35	1 10 95F14VGH	J2		
Spacing	: 1200				
TC Restraint:	350				
BC Restraint:	2400				

Timber Group: Kempas-2

Roofing Material : Concrete tile-normal 490 Pa

Ceiling Material : 13mm P/Bd to battens 85 Pa

Overhang design assumes structural fascia.

Truss Mark <T1 > 2 Single Trusses

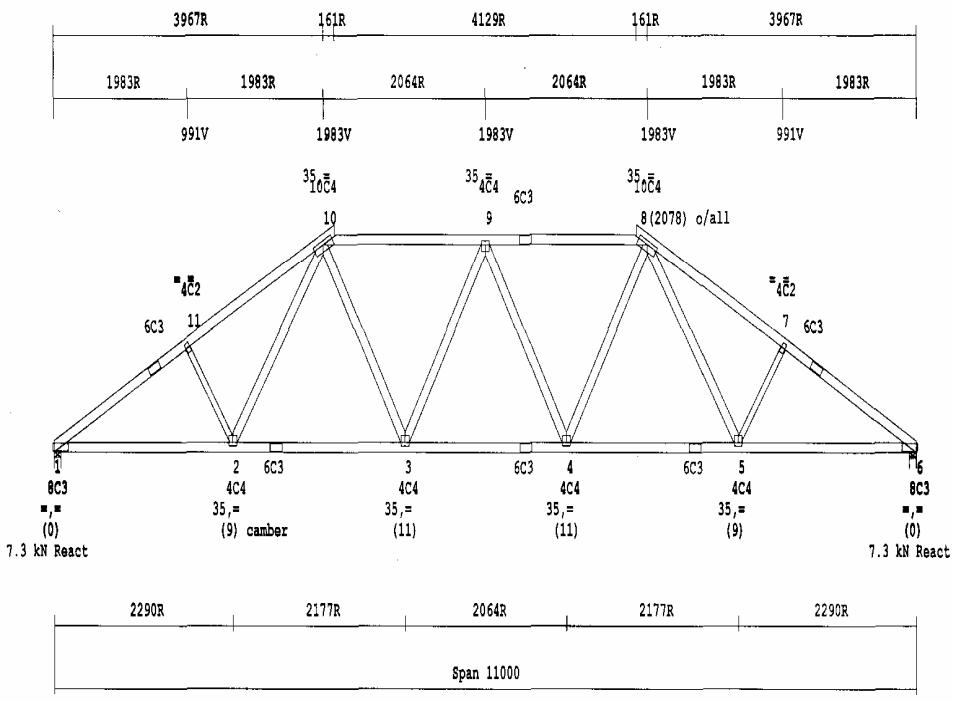

PT Multi Trussindo Perkasa 1:17pm 10 JUN 2005

Setrasari Mal blok B2-44. Bandung 40164 tel: 022-200 1421. fax:201 6715 Ver 3.4.2.0 PAGE 3

TRUSS DETAIL SHEET Job Ref: TA4

Customer: Tjeptjep Site Addr:

TRUSS DATA		CHORDS		WEBS	
Truss Type	: T/Std	1 7 95F14VGH	J2	u.o.n 95F14VGH	J2
TC pitch 1	: 30.00	7 10 95F14VGH	J2	2 13 65F14VGH	J2
Station	: 4800	10 11 95F14VGH	J2	6 8 65F14VGH	J2
Thickness	: 35	1 11 95F14VGH	J2		
Spacing	: 1200				
TC Restraint	: 350				
BC Restraint	: 2400				

Timber Group: Kempas-2

Roofing Material : Concrete tile-normal 490 Pa

Ceiling Material : 13mm P/Bd to battens 85 Pa

Overhang design assumes structural fascia.

Truss Mark <T2 > 2 Single Trusses

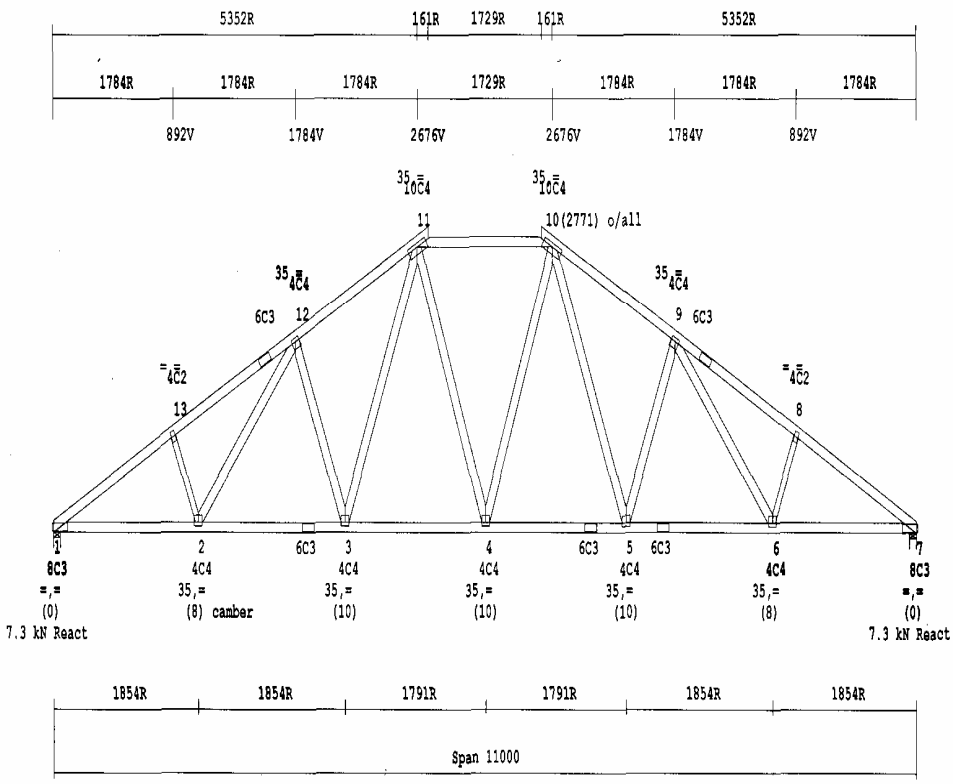

PT Multi Trussindo Perkasa 1:17pm 10 JUN 2005

Setrasari Mal blok B2-44. Bandung 40164 tel: 022-200 1421. fax:201 6715 Ver 3.4.2.0 PAGE 4

TRUSS DETAIL SHEET Job Ref: TA4

Customer: Tjeptjep Site Addr:

TRUSS DATA		CHORDS		WEBS	
Truss Type	: Std	1 8 95F14VGH	J2	u.o.n 95F14VGH	J2
TC pitch 1	: 30.00	8 12 95F14VGH	J2	2 15 65F14VGH	J2
Thickness	: 35	1 12 95F14VGH	J2	2 14 65F14VGH	J2
Spacing	: 1200			3 14 65F14VGH	J2
TC Restraint	: 350			6 10 65F14VGH	J2
BC Restraint	: 2400			7 10 65F14VGH	J2
				7 9 65F14VGH	J2

Timber Group: Kempas-2
Roofing Material : Concrete tile-normal 490 Pa
Ceiling Material : 13mm P/Bd to battens 85 Pa
Overhang design assumes structural fascia.

Truss Mark <S1 > 8 Single Trusses

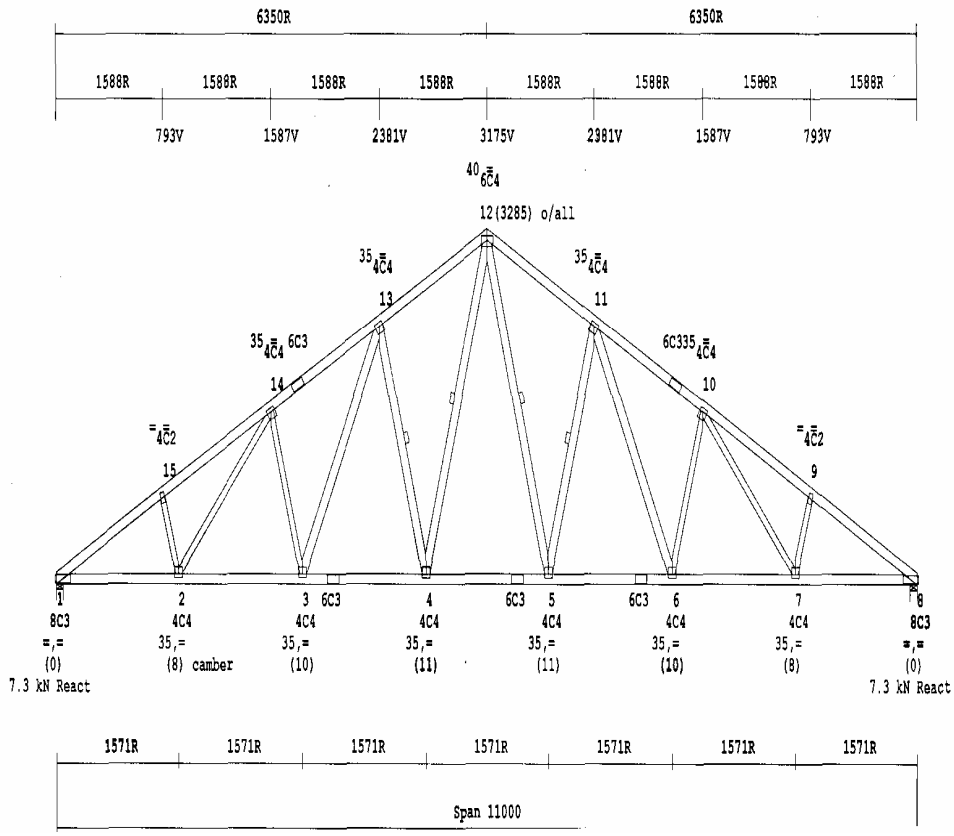

PT Multi Trussindo Perkasa 1:17pm 10 JUN 2005

Setrasari Mal blok B2-44. Bandung 40164 tel: 022-200 1421. fax:201 6715 Ver 3.4.2.0 PAGE 5

TRUSS DETAIL SHEET Job Ref: TA4

Customer: Tjeptjep Site Addr:

TRUSS DATA	**CHORDS**	**WEBS**
Truss Type : Jack	1 3 95F14VGH J2	u.o.n 65F14VGH J2
TC pitch 1 : 30.00	1 4 95F14VGH J2	
Station : 2400		
Thickness : 35		
Spacing : 1200		
TC Restraint: 350		
BC Restraint: 2400		

Timber Group: Kempas-2

Roofing Material : Concrete tile-normal 490 Pa

Ceiling Material : 13mm P/Bd to battens 85 Pa

Overhang design assumes structural fascia.

Truss Mark <J1 > 14 Single Trusses

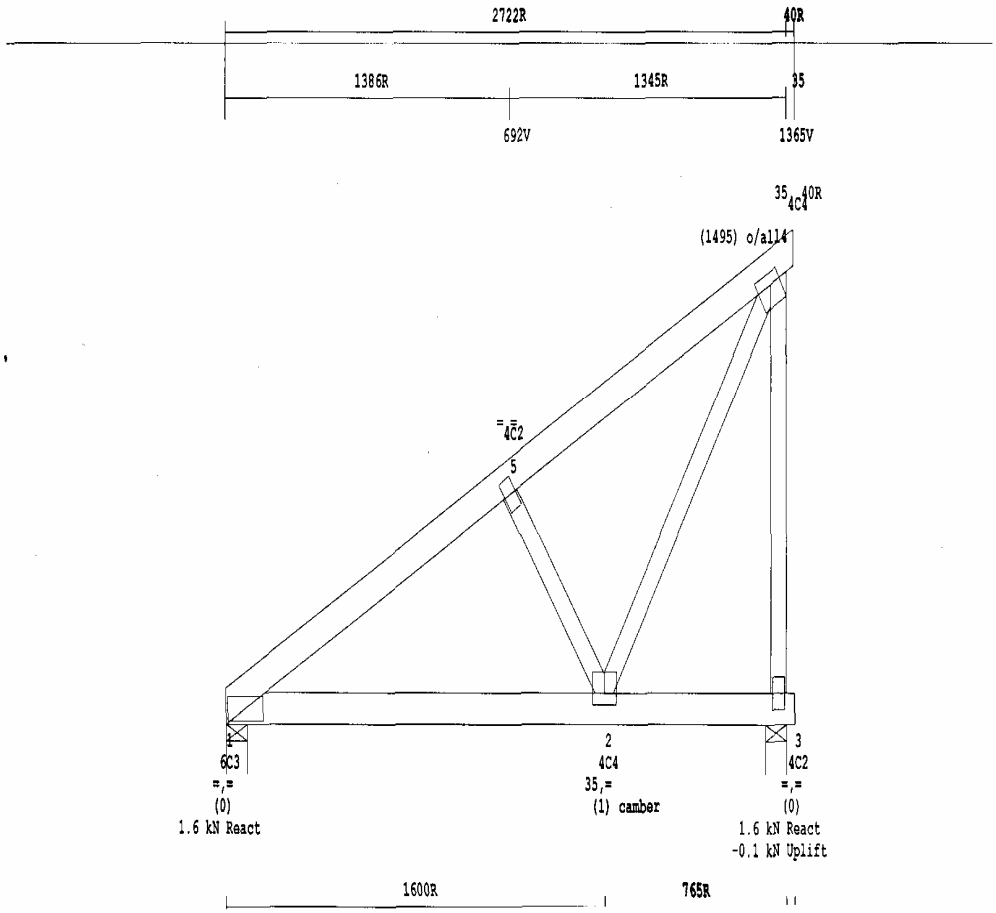

PT Multi Trussindo Perkasa 1:17pm 10 JUN 2005

Setrasari Mal blok B2-44. Bandung 40164 tel: 022-200 1421. fax:201 6715 Ver 3.4.2.0 PAGE 6

TRUSS DETAIL SHEET Job Ref: TA4

Customer: Tjeptjep Site Addr:

TRUSS DATA	**CHORDS**	**WEBS**
Truss Type : Hip	1 3 95F14VGH J2	u.o.n 65F14VGH J2
TC pitch 1 : 22.21	1 4 95F14VGH J2	
Thickness : 35		
Spacing : 1200		
TC Restraint: 350		
BC Restraint: 2400		

Timber Group: Kempas-2

Roofing Material : Concrete tile-normal 490 Pa

Ceiling Material : 13mm P/Bd to battens 85 Pa

Overhang design assumes structural fascia.

Truss Mark <H1 > 4 Single Trusses

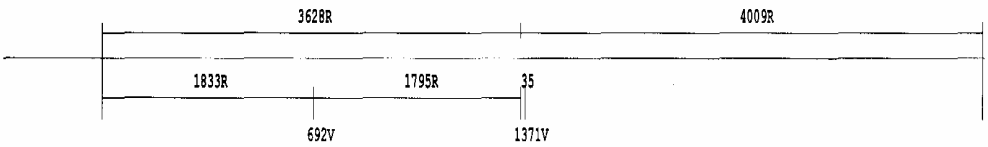

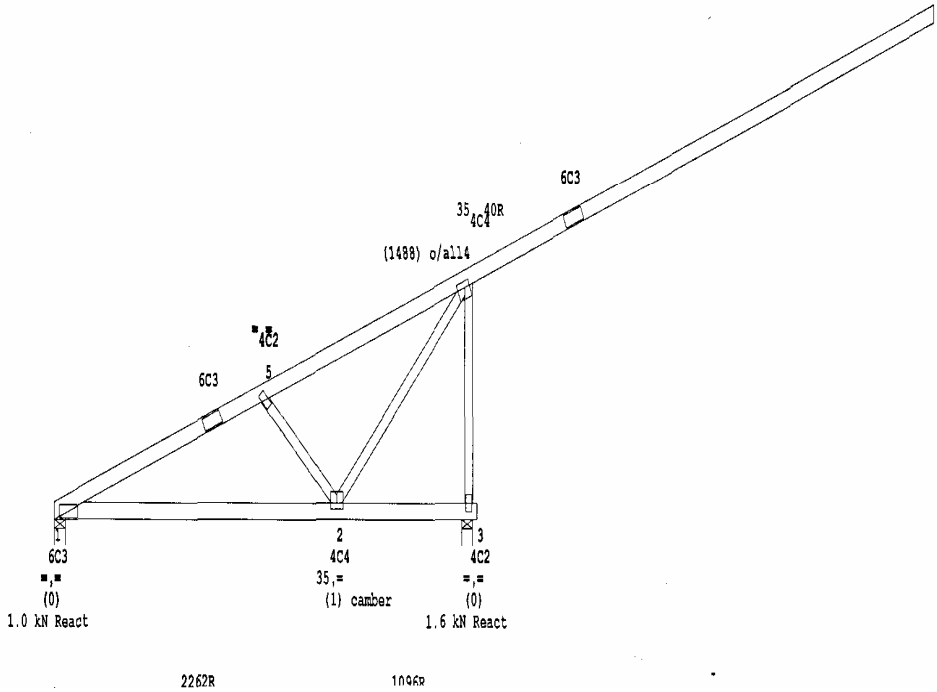

PT Multi Trussindo Perkasa 1:17pm 10 JUN 2005

Setrasari Mal blok B2-44. Bandung 40164 tel: 022-200 1421. fax:201 6715 Ver 3.4.2.0 PAGE 7

TRUSS DETAIL SHEET Job Ref: TA4

Customer: Tjeptjep Site Addr:

TRUSS DATA		**CHORDS**	**WEBS**
Truss Type	: Creeper	1 2 95F14VGH J2	u.o.n 65F14VGH J2
TC pitch 1	: 30.00	1 3 95F14VGH J2	
Station	: 1200		
Thickness	: 35		
Spacing	: 1200		
TC Restraint	: 350		
BC Restraint	: 2400		

Timber Group: Kempas-2

Roofing Material : Concrete tile-normal 490 Pa

Ceiling Material : 13mm P/Bd to battens 85 Pa

Overhang design assumes structural fascia.

Truss Mark <C1 > 8 Single Trusses

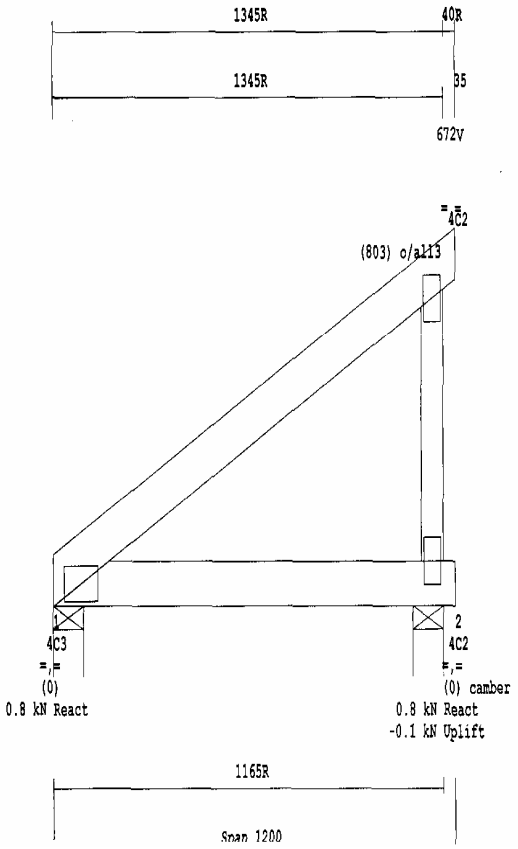

PRYDA INDONESIA PTY. LTD. - Setrasari Mal Blok B2-44 Bandung 40164 Tel : 022-200 1421 ; 421 Fax : 2016715

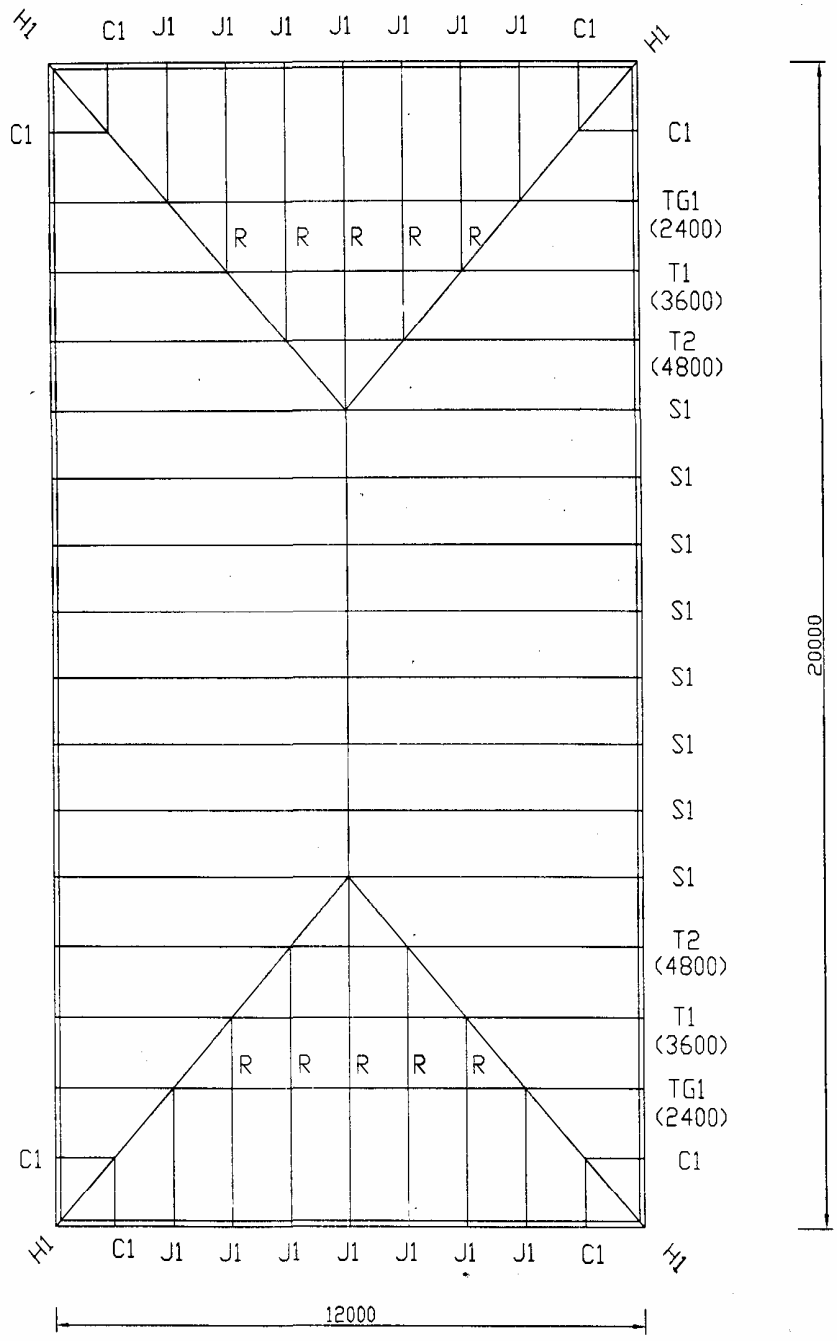

pryda	SCALE: 1 : 100	DRAWING TITLE: ROOF LAYOUT	DATE:	NOTE:
			PITCH: 30°	
		DESIGNER: Yohanes	ROOFING MATERIAL: Genteng Keramik	
		PLAN AREA: 240 m² / ROOF AREA: 277.13 m²	SPACING: 1200 mm	

PT Multi Trussindo Perkasa
Setrasari Mal blok B2-44. Bandung 40164 tel: 022-200 1421. fax:201 6715

1:19pm 10 JUN 2005
Ver 3.4.2.0 PAGE 1

TRUSS DETAIL SHEET

Job Ref: TA5

Customer: Tjeptjep Site Addr:

TRUSS DATA		**CHORDS**	**WEBS**
Truss Type	: T/Gird	1 9 145F14VGH J2	u.o.n 65F14VGH J2
TC pitch 1	: 30.00	9 11 95F14VGH J2	4 14 95F14VGH J2
Station	: 2400	11 16 145F14VGH J2	6 13 95F14VGH J2
Thickness	: 35	1 16 95F14VGH J2	
Spacing	: 1200		
TC Restraint:	350		
BC Restraint:	1500		
Timber Group:	Kempas-2		

Roofing Material : Concrete tile-normal 490 Pa
Ceiling Material : 13mm P/Bd to battens 85 Pa
Overhang design assumes structural fascia.
Truss Mark <TG1 > 2 Single Trusses

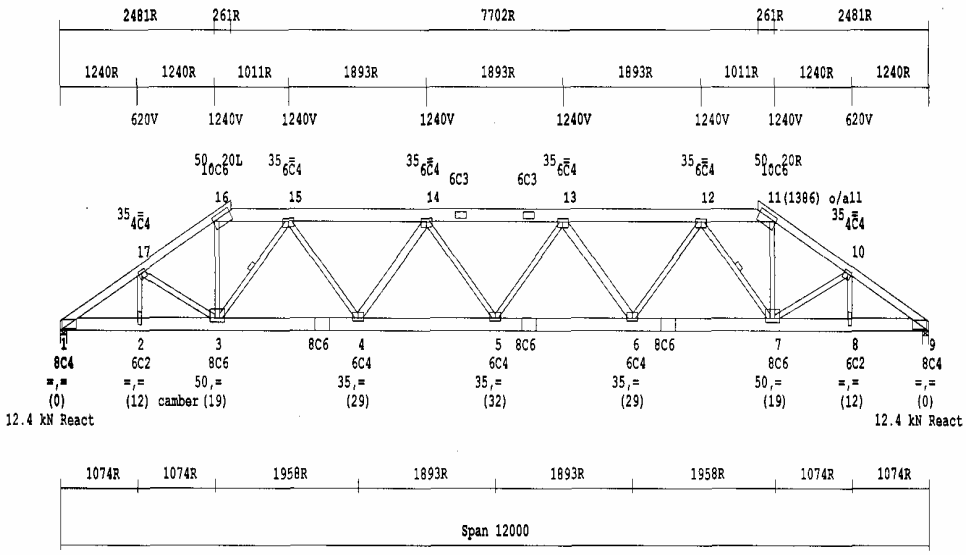

PT Multi Trussindo Perkasa 1:19pm 10 JUN 2005

Setrasari Mal blok B2-44. Bandung 40164 tel: 022-200 1421. fax:201 6715 Ver 3.4.2.0 PAGE 2

TRUSS DETAIL SHEET Job Ref: TA5

Customer: Tjeptjep Site Addr:

TRUSS DATA		CHORDS	WEBS
Truss Type	: T/Std	1 7 95F14VGH J2	u.o.n 95F14VGH J2
TC pitch 1	: 30.00	7 9 95F14VGH J2	2 13 65F14VGH J2
Station	: 3600	9 12 95F14VGH J2	6 8 65F14VGH J2
Thickness	: 35	1 12 95F14VGH J2	
Spacing	: 1200		
TC Restraint	: 350		
BC Restraint	: 2400		

Timber Group: Kempas-2

Roofing Material : Concrete tile-normal 490 Pa

Ceiling Material : 13mm P/Bd to battens 85 Pa

Overhang design assumes structural fascia.

Truss Mark <T1 > 2 Single Trusses

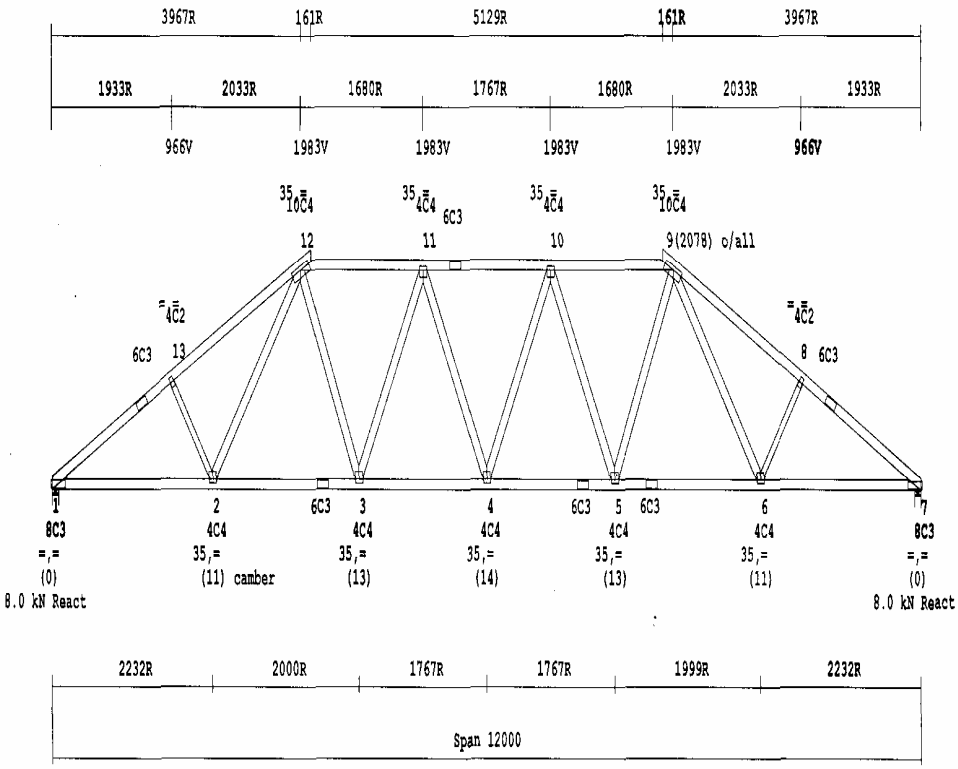

PT Multi Trussindo Perkasa 1:19pm 10 JUN 2005

Setrasari Mal blok B2-44. Bandung 40164 tel: 022-200 1421. fax:201 6715 Ver 3.4.2.0 PAGE 3

TRUSS DETAIL SHEET Job Ref: TA5

Customer: Tjeptjep Site Addr:

TRUSS DATA		**CHORDS**	**WEBS**
Truss Type	: T/Std	1 8 95F14VGH J2	u.o.n 95F14VGH J2
TC pitch 1	: 30.00	8 11 95F14VGH J2	2 15 65F14VGH J2
Station	: 4800	11 13 95F14VGH J2	7 9 65F14VGH J2
Thickness	: 35	1 13 95F14VGH J2	
Spacing	: 1200		
TC Restraint	: 350		
BC Restraint	: 2400		

Timber Group: Kempas-2

Roofing Material : Concrete tile-normal 490 Pa

Ceiling Material : 13mm P/Bd to battens 85 Pa

Overhang design assumes structural fascia.

Truss Mark <T2 > 2 Single Trusses

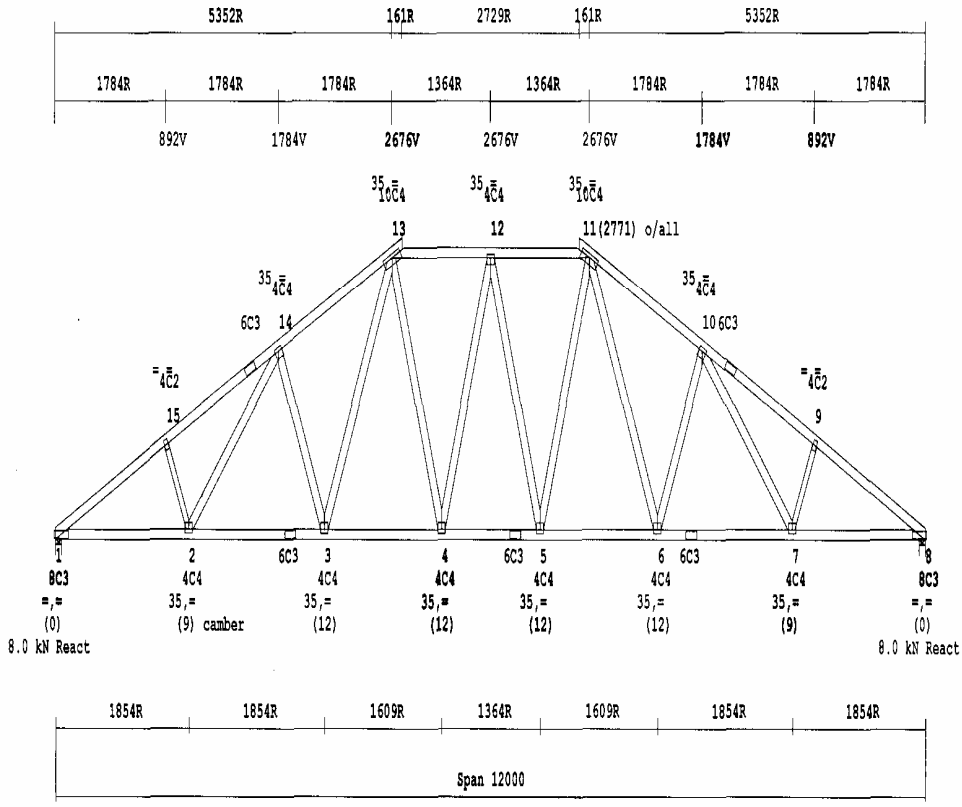

PT Multi Trussindo Perkasa
Setrasari Mal blok B2-44. Bandung 40164 tel: 022-200 1421. fax:201 6715

1:19pm 10 JUN 2005
Ver 3.4.2.0 PAGE 4

TRUSS DETAIL SHEET

Job Ref: TA5

Customer: Tjeptjep Site Addr:

TRUSS DATA	**CHORDS**	**WEBS**
Truss Type : Std	1 6 95F14VGH J2	u.o.n 95F14VGH J2
TC pitch 1 : 30.00	6 9 115F14VGH J2	2 11 65F14VGH J2
Thickness : 35	1 9 115F14VGH J2	5 7 65F14VGH J2
Spacing : 1200		
TC Restraint: 350		
BC Restraint: 2400		

Timber Group: Kempas-2
Roofing Material : Concrete tile-normal 490 Pa
Ceiling Material : 13mm P/Bd to battens 85 Pa
Overhang design assumes structural fascia.
Truss Mark <S1 > 8 Single Trusses

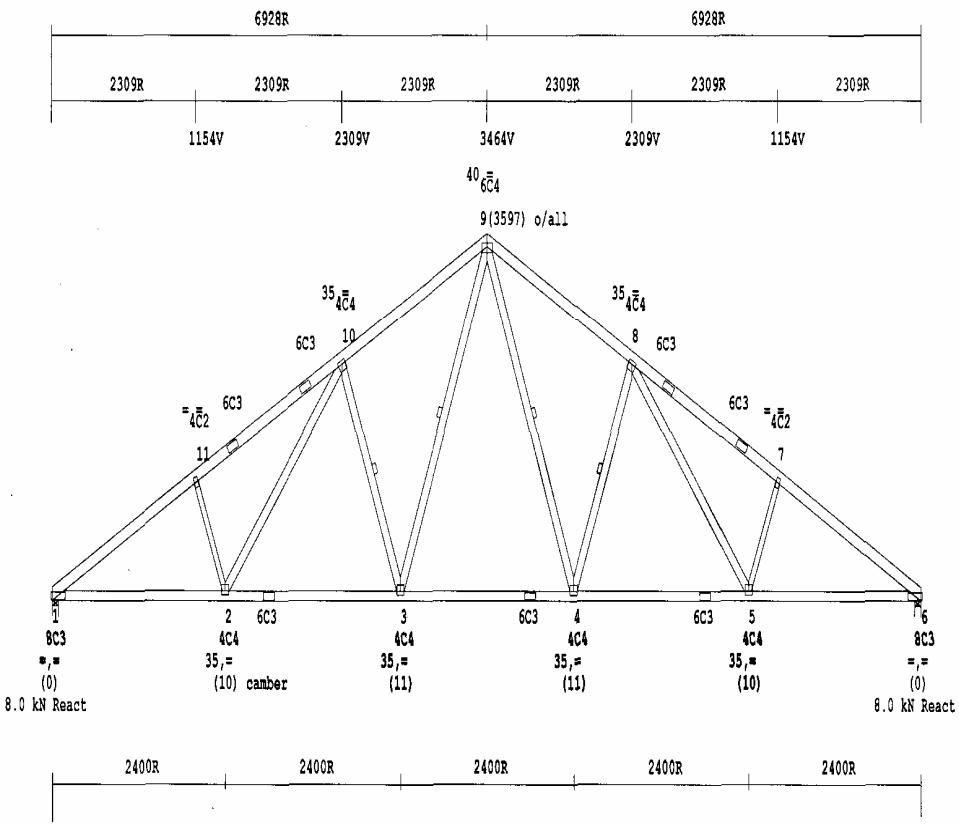

PT Multi Trussindo Perkasa 1:19pm 10 JUN 2005

Setrasari Mal blok B2-44. Bandung 40164 tel: 022-200 1421. fax:201 6715 Ver 3.4.2.0 PAGE 5

TRUSS DETAIL SHEET Job Ref: TA5

Customer: Tjeptjep Site Addr:

TRUSS DATA		CHORDS	WEBS
Truss Type	: Jack	1 3 95F14VGH J2	u.o.n 65F14VGH J2
TC pitch 1	: 30.00	1 4 95F14VGH J2	
Station	: 2400		
Thickness	: 35		
Spacing	: 1200		
TC Restraint	: 350		
BC Restraint	: 2400		

Timber Group: Kempas-2
Roofing Material : Concrete tile-normal 490 Pa
Ceiling Material : 13mm P/Bd to battens 85 Pa
Overhang design assumes structural fascia.

Truss Mark <J1 > ,14 Single Trusses

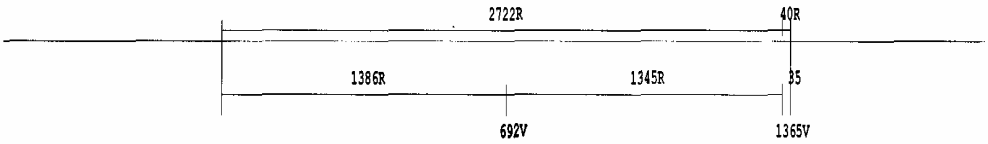

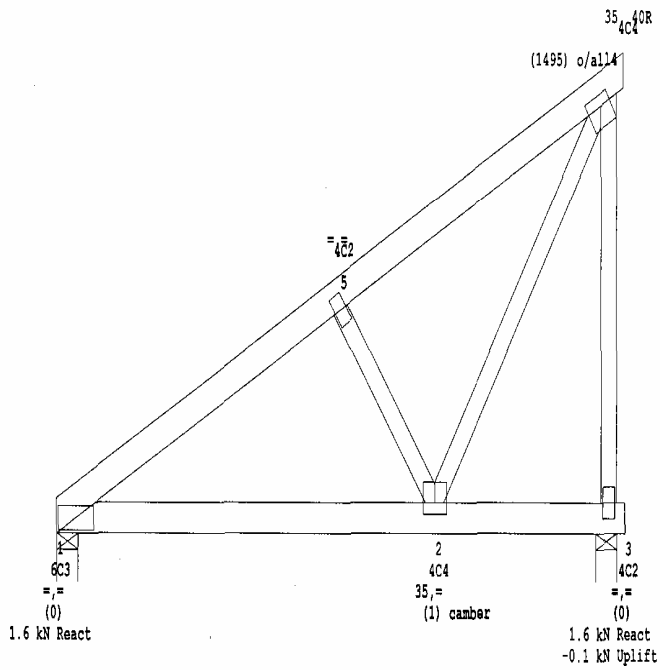

PT Multi Trussindo Perkasa
Setrasari Mal blok B2-44. Bandung 40164 tel: 022-200 1421. fax:201 6715

1:19pm 10 JUN 2005
Ver 3.4.2.0 PAGE 6

TRUSS DETAIL SHEET

Job Ref: TA5

Customer: Tjeptjep Site Addr:

TRUSS DATA	**CHORDS**	**WEBS**
Truss Type : Hip	1 3 95F14VGH J2	u.o.n 65F14VGH J2
TC pitch 1 : 22.21	1 4 95F14VGH J2	
Thickness : 35		
Spacing : 1200		
TC Restraint: 350		
BC Restraint: 2400		
Timber Group: Kempas-2		

Roofing Material : Concrete tile-normal 490 Pa
Ceiling Material : 13mm P/Bd to battens 85 Pa
Overhang design assumes structural fascia.
Truss Mark <H1 > 4 Single Trusses

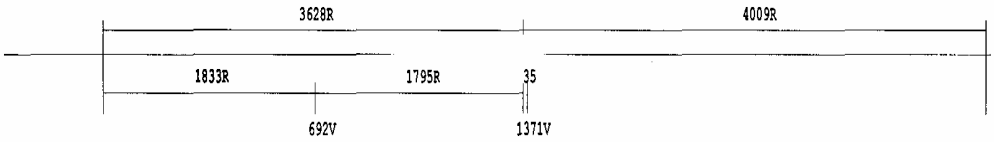

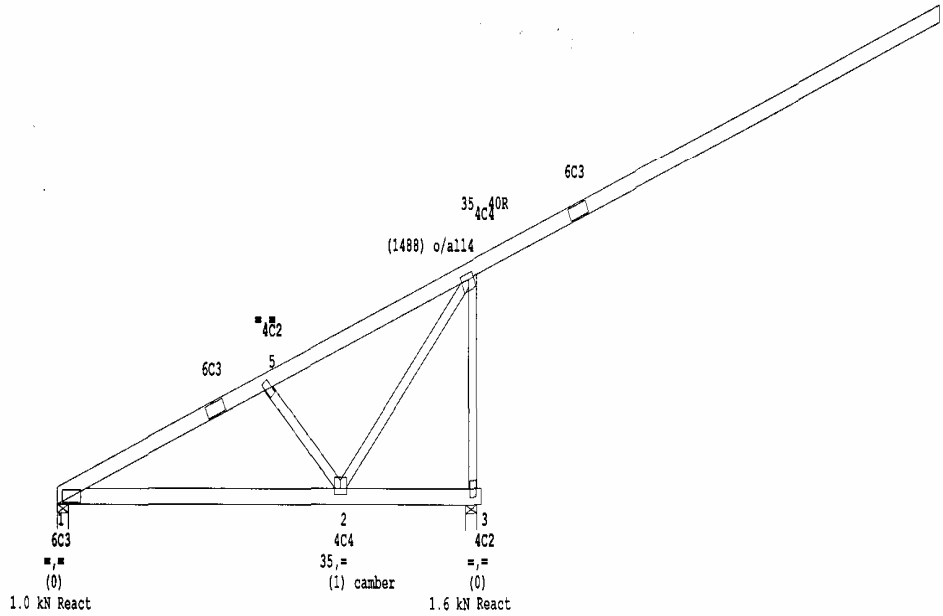

PT Multi Trussindo Perkasa 1:19pm 10 JUN 2005

Setrasari Mal blok B2-44. Bandung 40164 tel: 022-200 1421. fax:201 6715 Ver 3.4.2.0 PAGE 7

TRUSS DETAIL SHEET Job Ref: TA5

Customer: Tjeptjep Site Addr:

TRUSS DATA		**CHORDS**	**WEBS**
Truss Type	: Creeper	1 2 95F14VGH J2	u.o.n 65F14VGH J2
TC pitch 1	: 30.00	1 3 95F14VGH J2	
Station	: 1200		
Thickness	: 35		
Spacing	: 1200		
TC Restraint	: 350		
BC Restraint	: 2400		

Timber Group: Kempas-2

Roofing Material : Concrete tile-normal 490 Pa

Ceiling Material : 13mm P/Bd to battens 85 Pa

Overhang design assumes structural fascia.

Truss Mark <C1 > 8 Single Trusses

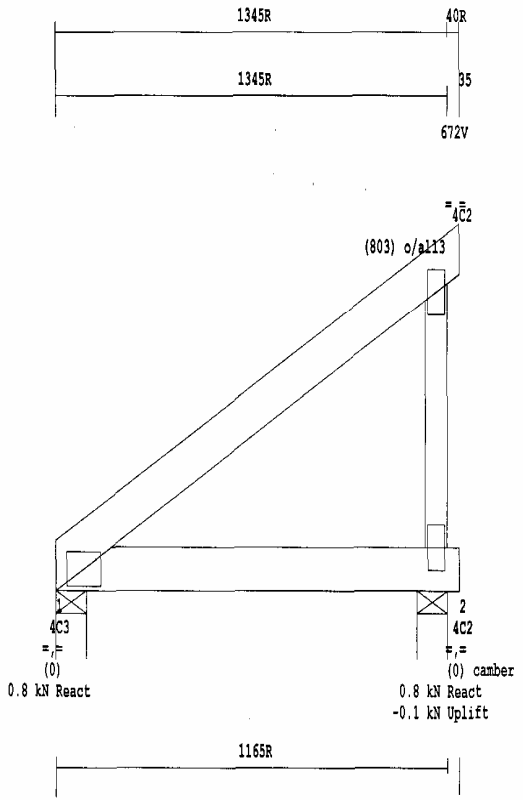

PRYDA INDONESIA PTY. LTD. - Setrasari Mal Blok B2-44 Bandung 40164 Tel : 022-200 1421 ; 421 Fax : 2016715

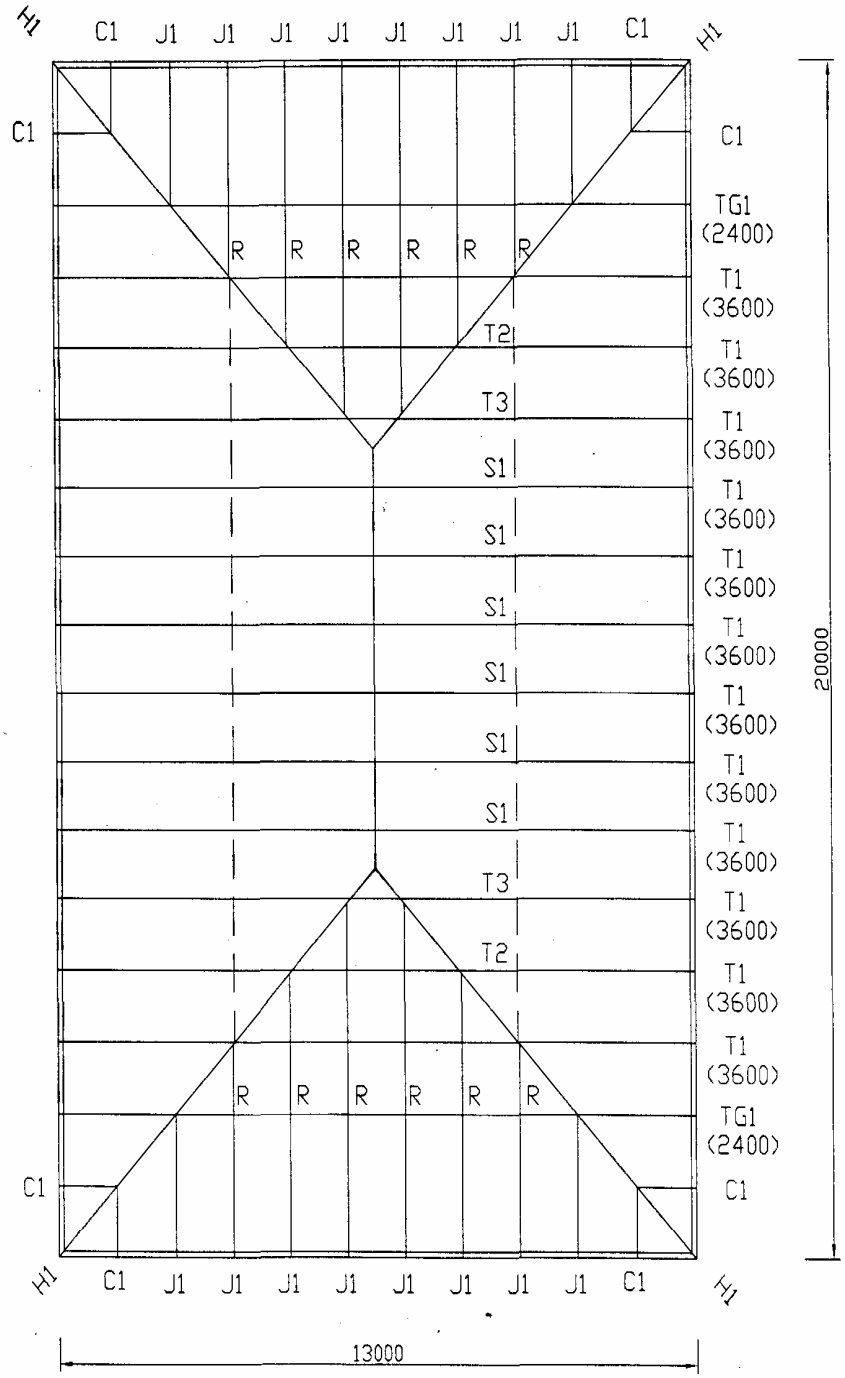

pryda	SCALE: 1 : 100	DRAWING TITLE: ROOF LAYOUT	DATE: 20/08/2005	NOTE:
			PITCH: 30°	
		DESIGNER: Yohanes	ROOFING MATERIAL: Genteng Keramik	
		PLAN AREA: 260 m² / ROOF AREA: 300.22 m²	SPACING: 1200 mm	

PT Multi Trussindo Perkasa

Setrasari Mal blok B2-44. Bandung 40164 tel: 022-200 1421. fax:201 6715

1:19pm 10 JUN 2005
Ver 3.4.2.0 PAGE 1

TRUSS DETAIL SHEET

Job Ref: TA6

Customer: Tjeptjep

Site Addr:

TRUSS DATA		CHORDS	WEBS
Truss Type	: T/Gird	1 9 95F14VGH J2	u.o.n 65F14VGH J2
TC pitch 1	: 30.00	9 11 95F14VGH J2	
Station	: 2400	11 16 115F14VGH J2	
Thickness	: 35	1 16 95F14VGH J2	
Spacing	: 1200		

TC Restraint: 350
BC Restraint: 1500
Timber Group: Kempas-2
Roofing Material : Concrete tile-normal 490 Pa
Ceiling Material : 13mm P/Bd to battens 85 Pa
Overhang design assumes structural fascia.

Nailing: Use 3.15 dia. hand hammered or 2.9 dia. power driven nails. u.o.n 1 Row@250 crs

Truss Mark <TG1 > 2 Double Trusses

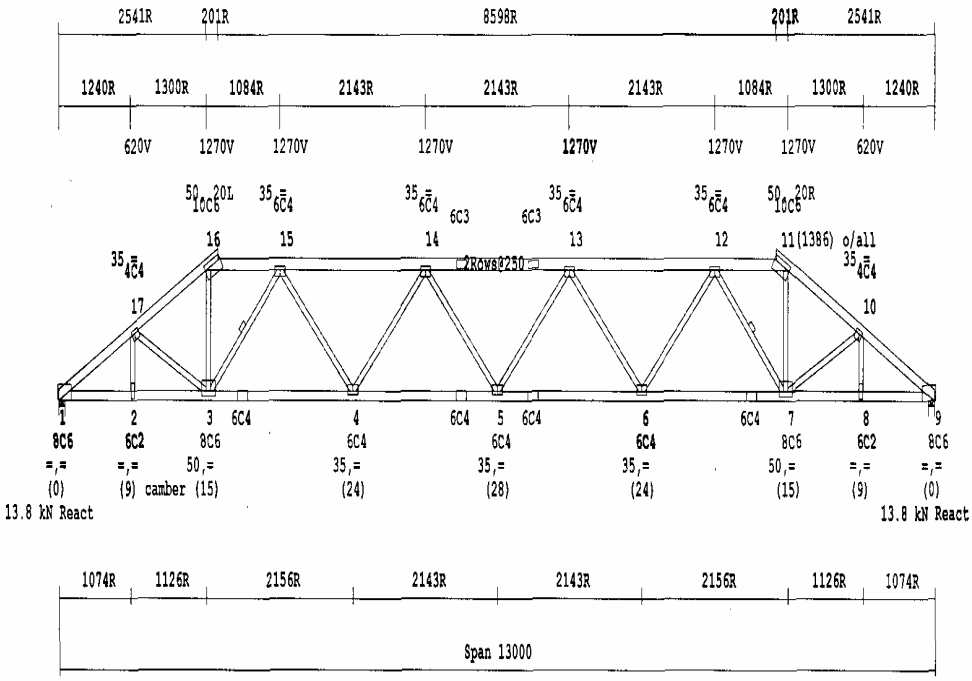

PT Multi Trussindo Perkasa
Setrasari Mal blok B2-44. Bandung 40164 tel: 022-200 1421. fax:201 6715

1:19pm 10 JUN 2005
Ver 3.4.2.0 PAGE 2

TRUSS DETAIL SHEET

Job Ref: TA6

Customer: Tjeptjep Site Addr:

TRUSS DATA		**CHORDS**	**WEBS**
Truss Type	: T/Std	1 8 95F14VGH J2	u.o.n 95F14VGH J2
TC pitch 1	: 30.00	8 10 115F14VGH J2	2 15 65F14VGH J2
Station	: 3600	10 14 115F14VGH J2	3 14 65F14VGH J2
Thickness	: 35	1 14 115F14VGH J2	6 10 65F14VGH J2
Spacing	: 1200		7 9 65F14VGH J2

TC Restraint: 350
BC Restraint: 2400
Timber Group: Kempas-2
Roofing Material : Concrete tile-normal 490 Pa
Ceiling Material : 13mm P/Bd to battens 85 Pa
Overhang design assumes structural fascia.
Truss Mark <T1 > 12 Single Trusses

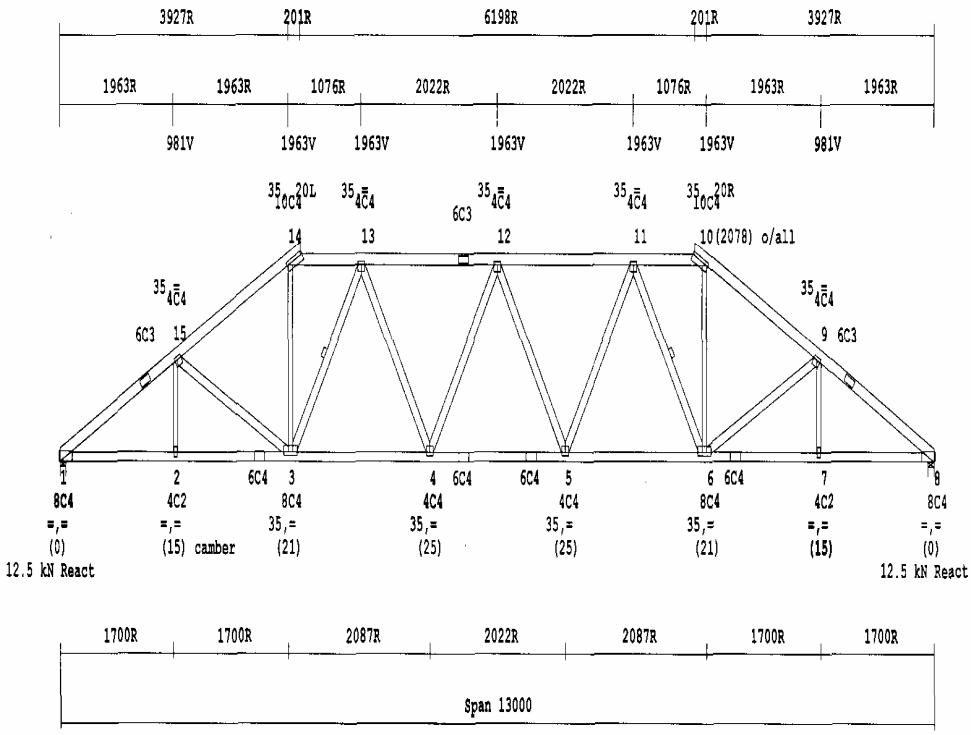

PT Multi Trussindo Perkasa
Setrasari Mal blok B2-44. Bandung 40164 tel: 022-200 1421. fax:201 6715

1:19pm 10 JUN 2005
Ver 3.4.2.0 PAGE 3

TRUSS DETAIL SHEET

Job Ref: TA6

Customer: Tjeptjep Site Addr:

TRUSS DATA	**CHORDS**	**WEBS**
Truss Type : T/Std	1 7 95F14VGH J2	u.o.n 65F14VGH J2
TC pitch 1 : 30.00	7 9 95F14VGH J2	
Station : 1200	9 12 95F14VGH J2	
Thickness : 35	1 12 95F14VGH J2	
Spacing : 1200		
TC Restraint: 350		
BC Restraint: 2400		
Timber Group: Kempas-2		

Roofing Material : Concrete tile-normal 490 Pa
Ceiling Material : 13mm P/Bd to battens 85 Pa
Overhang design assumes structural fascia.

Truss Mark <T2 > 2 Single Trusses

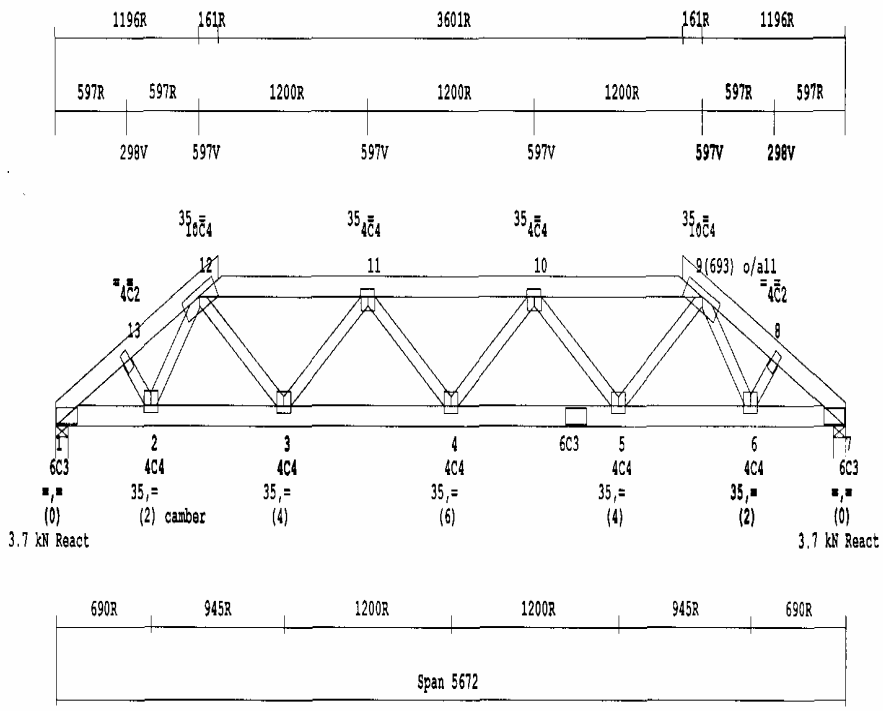

PT Multi Trussindo Perkasa 1:19pm 10 JUN 2005

Setrasari Mal blok B2-44. Bandung 40164 tel: 022-200 1421. fax:201 6715 Ver 3.4.2.0 PAGE 7

TRUSS DETAIL SHEET Job Ref: TA6

Customer: Tjeptjep Site Addr:

TRUSS DATA	**CHORDS**	**WEBS**
Truss Type : T/Std	1 5 95F14VGH J2	u.o.n 65F14VGH J2
TC pitch 1 : 30.00	5 7 95F14VGH J2	
Station : 2400	7 8 95F14VGH J2	
Thickness : 35	1 8 95F14VGH J2	
Spacing : 1200		
TC Restraint: 350		
BC Restraint: 2400		

Timber Group: Kempas-2

Roofing Material : Concrete tile-normal 490 Pa

Ceiling Material : 13mm P/Bd to battens 85 Pa

Overhang design assumes structural fascia.

Truss Mark <T3 > 2 Single Trusses

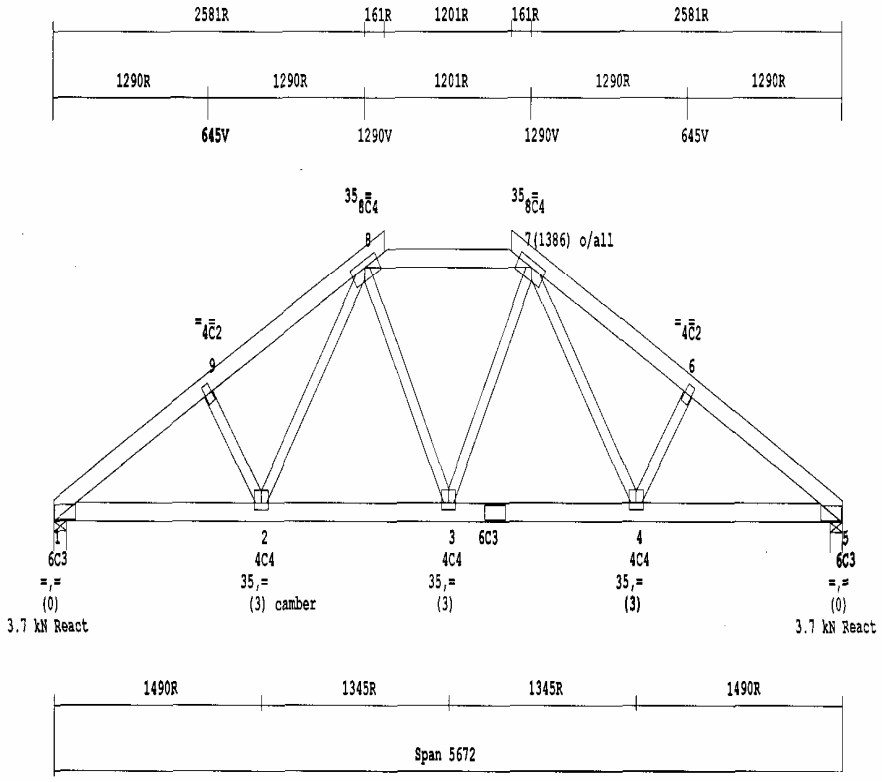

PT Multi Trussindo Perkasa 1:19pm 10 JUN 2005

Setrasari Mal blok B2-44. Bandung 40164 tel: 022-200 1421. fax:201 6715 Ver 3.4.2.0 PAGE 8

TRUSS DETAIL SHEET Job Ref: TA6

Customer: Tjeptjep Site Addr:

TRUSS DATA	**CHORDS**	**WEBS**
Truss Type : Std	1 4 95F14VGH J2	u.o.n 65F14VGH J2
TC pitch 1 : 30.00	4 6 95F14VGH J2	
Thickness : 35	1 6 95F14VGH J2	
Spacing : 1200		
TC Restraint: 350		
BC Restraint: 2400		

Timber Group: Kempas-2

Roofing Material : Concrete tile-normal 490 Pa

Ceiling Material : 13mm P/Bd to battens 85 Pa

Overhang design assumes structural fascia.

Truss Mark <S1 > 6 Single Trusses

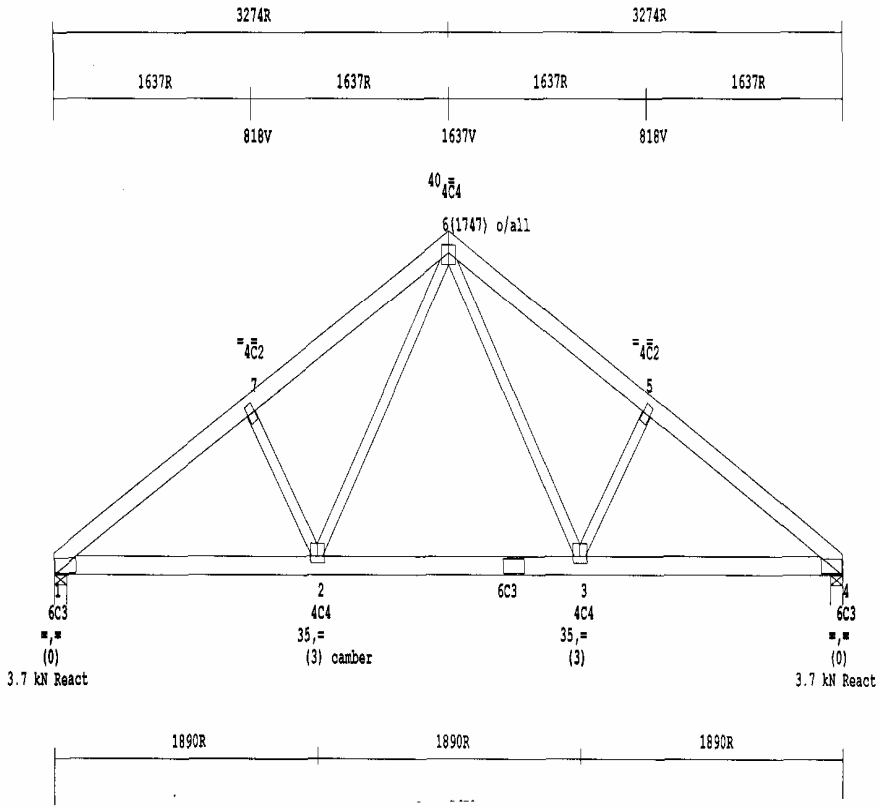

PT Multi Trussindo Perkasa

Setrasari Mal blok B2-44. Bandung 40164 tel: 022-200 1421. fax:201 6715

1:19pm 10 JUN 2005
Ver 3.4.2.0 PAGE 4

TRUSS DETAIL SHEET

Job Ref: TA6

Customer: Tjeptjep Site Addr:

TRUSS DATA	**CHORDS**	**WEBS**
Truss Type : Jack	1 3 95F14VGH J2	u.o.n 65F14VGH J2
TC pitch 1 : 30.00	1 4 95F14VGH J2	
Station : 2400		
Thickness : 35		
Spacing : 1200		
TC Restraint: 350		
BC Restraint: 2400		
Timber Group: Kempas-2		

Roofing Material : Concrete tile-normal 490 Pa
Ceiling Material : 13mm P/Bd to battens 85 Pa
Overhang design assumes structural fascia.

Truss Mark <J1 > 16 Single Trusses

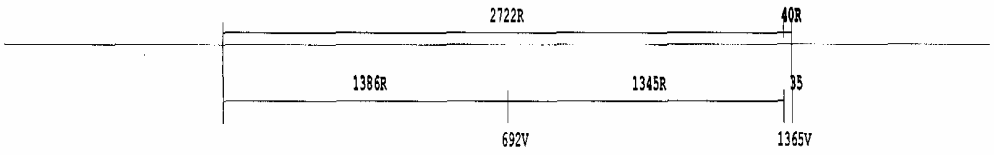

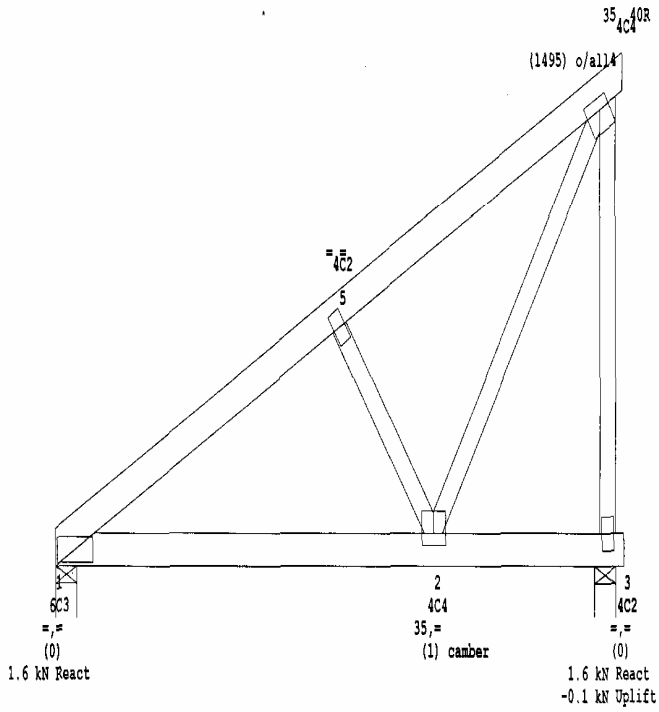

PT Multi Trussindo Perkasa 1:19pm 10 JUN 2005

Setrasari Mal blok B2-44. Bandung 40164 tel: 022-200 1421. fax:201 6715 Ver 3.4.2.0 PAGE 5

TRUSS DETAIL SHEET Job Ref: TA6

Customer: Tjeptjep Site Addr:

TRUSS DATA	**CHORDS**	**WEBS**
Truss Type : Hip	1 3 95F14VGH J2	u.o.n 65F14VGH J2
TC pitch 1 : 22.21	1 4 95F14VGH J2	
Thickness : 35		
Spacing : 1200		
TC Restraint: 350		
BC Restraint: 2400		

Timber Group: Kempas-2

Roofing Material : Concrete tile-normal 490 Pa

Ceiling Material : 13mm P/Bd to battens 85 Pa

Overhang design assumes structural fascia.

Truss Mark <H1 > 4 Single Trusses

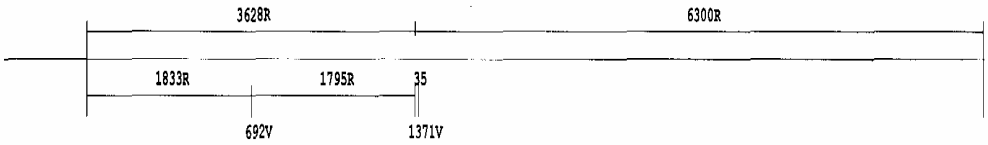

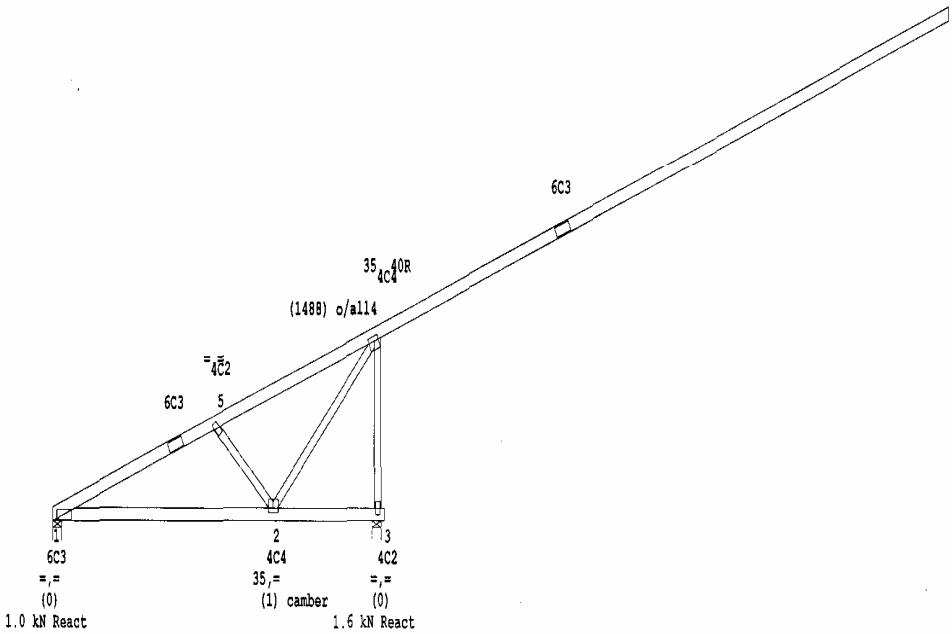

PT Multi Trussindo Perkasa 1:19pm 10 JUN 2005

Setrasari Mal blok B2-44. Bandung 40164 tel: 022-200 1421. fax:201 6715 Ver 3.4.2.0 PAGE 6

TRUSS DETAIL SHEET Job Ref: TA6

Customer: Tjeptjep Site Addr:

TRUSS DATA		**CHORDS**	**WEBS**
Truss Type	: Creeper	1 2 95F14VGH J2	u.o.n 65F14VGH J2
TC pitch 1	: 30.00	1 3 95F14VGH J2	
Station	: 1200		
Thickness	: 35		
Spacing	: 1200		
TC Restraint	: 350		
BC Restraint	: 2400		

Timber Group: Kempas-2

Roofing Material : Concrete tile-normal 490 Pa

Ceiling Material : 13mm P/Bd to battens 85 Pa

Overhang design assumes structural fascia.

Truss Mark <C1 > 8 Single Trusses

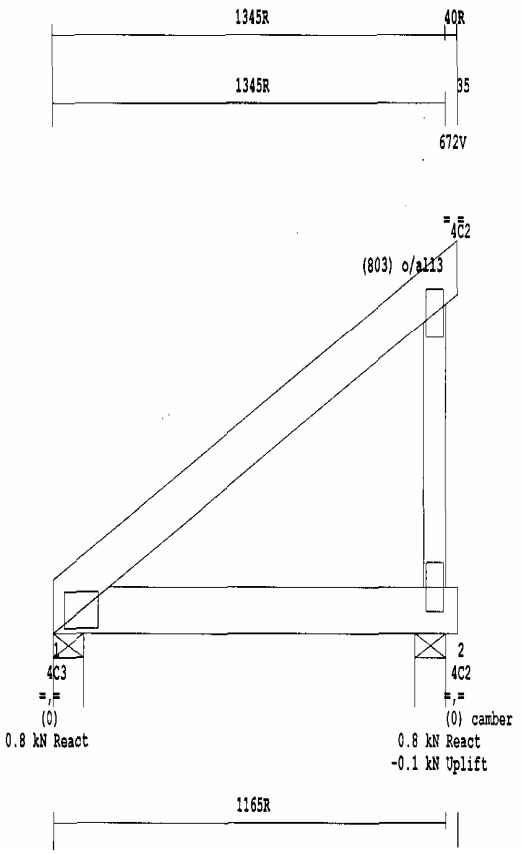

PRYDA INDONESIA PTY. LTD. - Setrasari Mal Blok B2-44 Bandung 40164 Tel : 022-200 1421 ; 421 Fax : 2016715

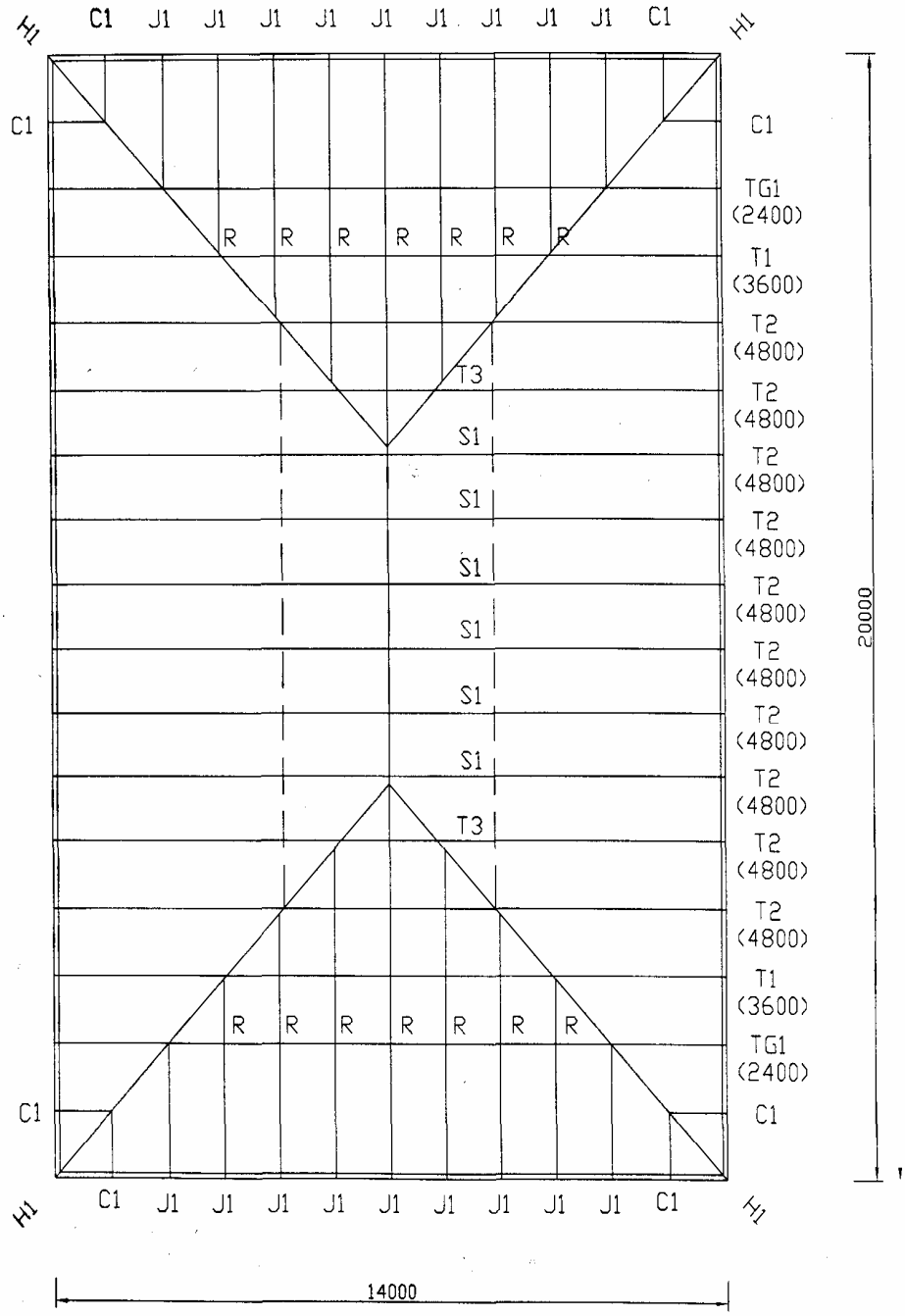

pryda	SCALE: 1 : 100	DRAWING TITLE: ROOF LAYOUT	DATE: 20/08/2005	NOTE:
			PITCH: 30°	
		DESIGNER: Yohanes	ROOFING MATERIAL: Genteng Keramik	
		PLAN AREA: 280 m² / ROOF AREA: 323.32 m²	SPACING: 1200 mm	

PT Multi Trussindo Perkasa 1:19pm 10 JUN 2005

Setrasari Mal blok B2-44. Bandung 40164 tel: 022-200 1421. fax:201 6715 Ver 3.4.2.0 PAGE 1

TRUSS DETAIL SHEET Job Ref: TA7

Customer: Tjeptjep Site Addr:

TRUSS DATA		CHORDS	WEBS
Truss Type	: T/Gird	1 8 95F14VGH J2	u.o.n 65F14VGH J2
TC pitch 1	: 30.00	8 10 95F14VGH J2	
Station	: 2400	10 14 115F14VGH J2	
Thickness	: 35	1 14 95F14VGH J2	
Spacing	: 1200		
TC Restraint	: 350		
BC Restraint	: 1500		

Timber Group: Kempas-2

Roofing Material : Concrete tile-normal 490 Pa

Ceiling Material : 13mm P/Bd to battens 85 Pa

Overhang design assumes structural fascia.

Nailing: Use 3.15 dia. hand hammered or 2.9 dia. power driven nails. u.o.n 1 Row@250 crs

Truss Mark <TG1 > 2 Double Trusses

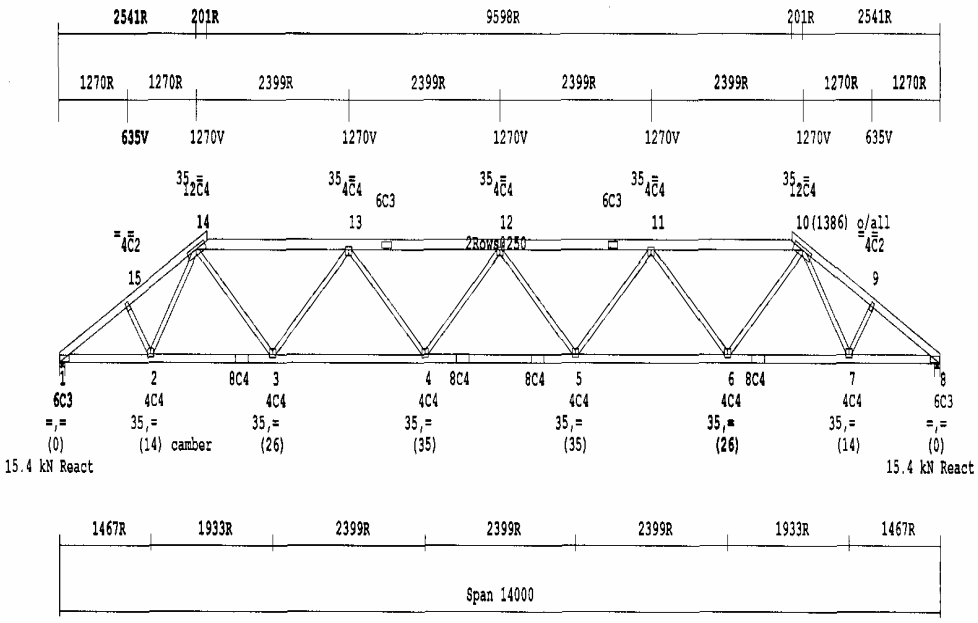

PT Multi Trussindo Perkasa 1:19pm 10 JUN 2005

Setrasari Mal blok B2-44. Bandung 40164 tel: 022-200 1421. fax:201 6715 Ver 3.4.2.0 PAGE 2

TRUSS DETAIL SHEET Job Ref: TA7

Customer: Tjeptjep Site Addr:

TRUSS DATA		**CHORDS**	**WEBS**
Truss Type	: T/Std	1 7 95F14VGH J2	u.o.n 95F14VGH J2
TC pitch 1	: 30.00	7 9 115F14VGH J2	2 13 65F14VGH J2
Station	: 3600	9 12 145F14VGH J2	6 8 65F14VGH J2
Thickness	: 35	1 12 115F14VGH J2	
Spacing	: 1200		
TC Restraint:	350		
BC Restraint:	2400		

Timber Group: Kempas-2

Roofing Material : Concrete tile-normal 490 Pa

Ceiling Material : 13mm P/Bd to battens 85 Pa

Overhang design assumes structural fascia.

Truss Mark <T1 > 2 Single Trusses

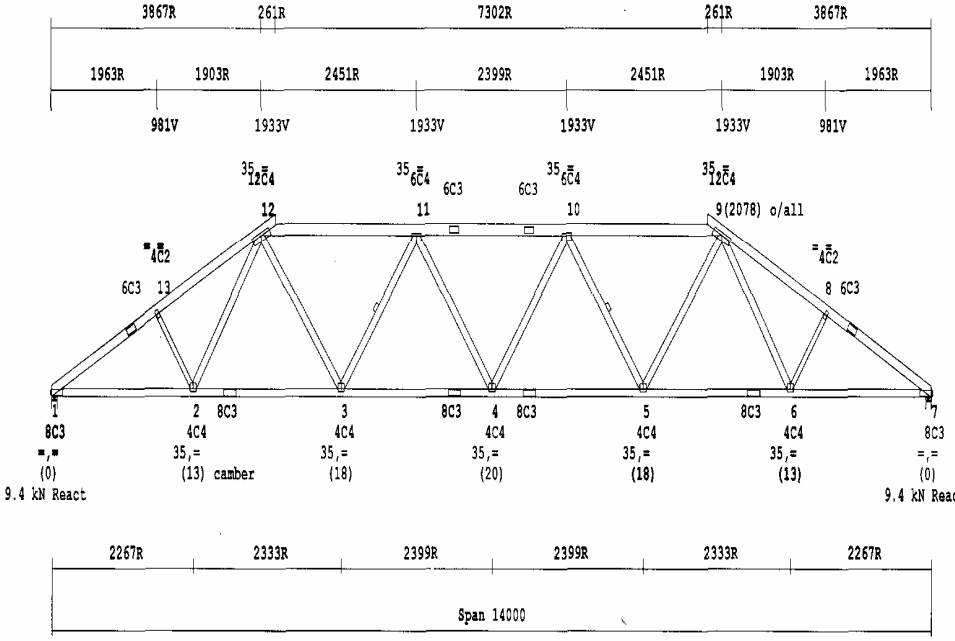

PT Multi Trussindo Perkasa 1:19pm 10 JUN 2005

Setrasari Mal blok B2-44. Bandung 40164 tel: 022-200 1421. fax:201 6715 Ver 3.4.2.0 PAGE 8

TRUSS DETAIL SHEET Job Ref: TA7

Customer: Tjeptjep Site Addr:

TRUSS DATA		CHORDS		WEBS	
Truss Type	: T/Std	1 10 95F14VGH	J2	u.o.n 95F14VGH	J2
TC pitch 1	: 30.00	10 14 115F14VGH	J2	2 19 65F14VGH	J2
Station	: 4800	14 16 145F14VGH	J2	2 18 65F14VGH	J2
Thickness	: 35	1 16 115F14VGH	J2	3 18 65F14VGH	J2
Spacing	: 1200			8 12 65F14VGH	J2
TC Restraint:	350			9 12 65F14VGH	J2
BC Restraint:	2400			9 11 65F14VGH	J2

Timber Group: Kempas-2

Roofing Material : Concrete tile-normal 490 Pa

Ceiling Material : 13mm P/Bd to battens 85 Pa

Overhang design assumes structural fascia.

Truss Mark <T2 > 10 Single Trusses

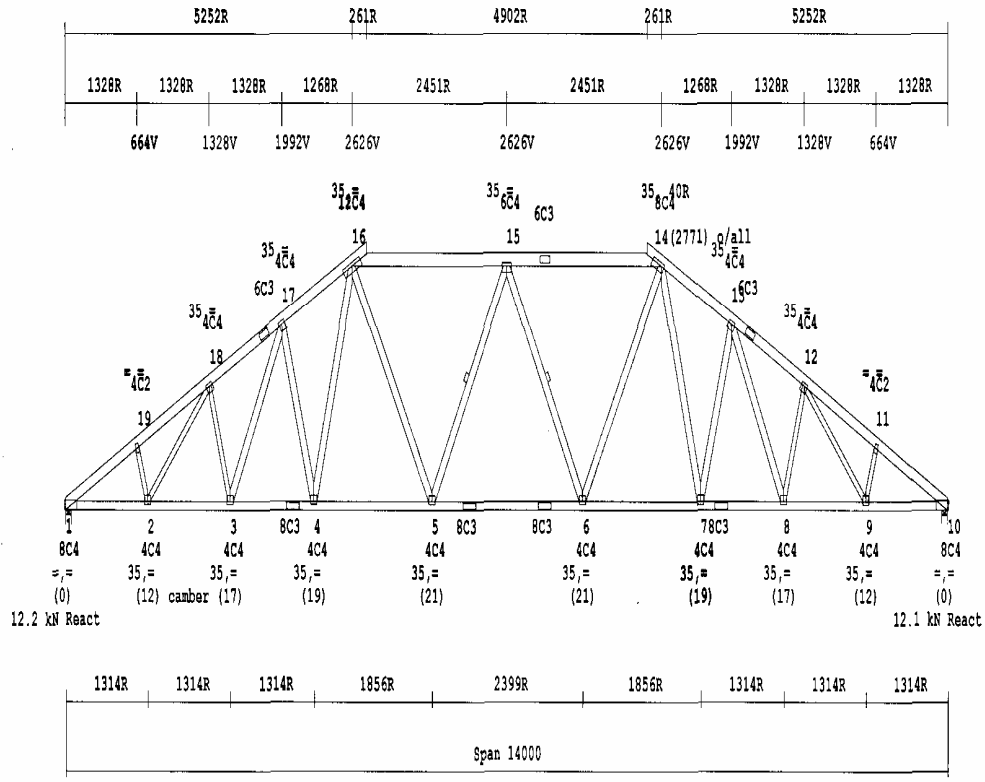

PT Multi Trussindo Perkasa 1:19pm 10 JUN 2005

Setrasari Mal blok B2-44. Bandung 40164 tel: 022-200 1421. fax:201 6715 Ver 3.4.2.0 PAGE 6

TRUSS DETAIL SHEET Job Ref: TA7

Customer: Tjeptjep Site Addr:

TRUSS DATA		**CHORDS**	**WEBS**
Truss Type	: T/Std	1 4 95F14VGH J2	u.o.n 65F14VGH J2
TC pitch 1	: 30.00	4 5 115F14VGH J2	
Station	: 1200	5 7 95F14VGH J2	
Thickness	: 35	1 7 115F14VGH J2	
Spacing	: 1200		
TC Restraint	: 350		
BC Restraint	: 2400		

Timber Group: Kempas-2

Roofing Material : Concrete tile-normal 490 Pa

Ceiling Material : 13mm P/Bd to battens 85 Pa

Overhang design assumes structural fascia.

Truss Mark <T3 > 2 Single Trusses

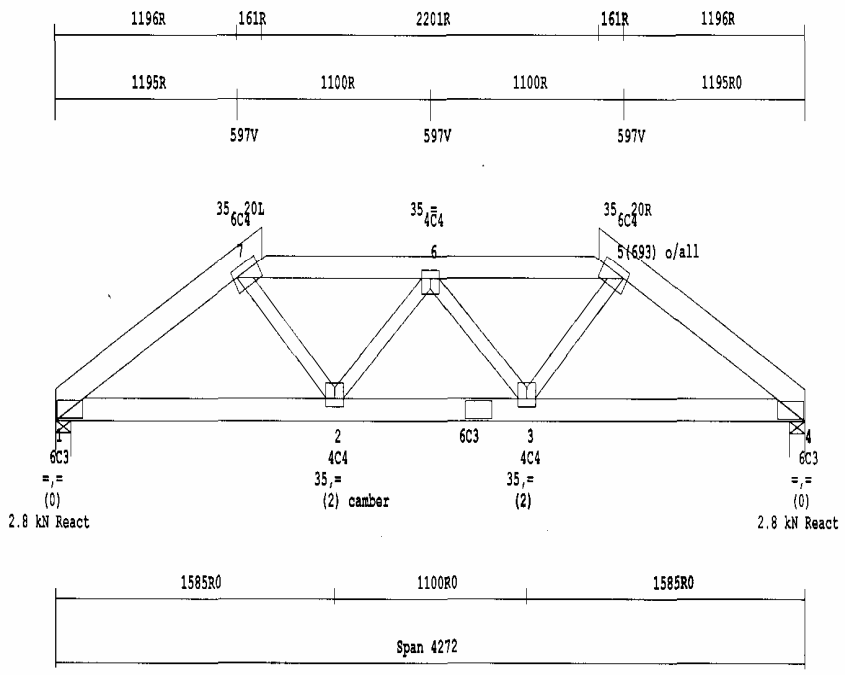

PT Multi Trussindo Perkasa 1:19pm 10 JUN 2005

Setrasari Mal blok B2-44. Bandung 40164 tel: 022-200 1421. fax:201 6715 Ver 3.4.2.0 PAGE 7

TRUSS DETAIL SHEET Job Ref: TA7

Customer: Tjeptjep Site Addr:

TRUSS DATA	**CHORDS**	**WEBS**
Truss Type : Std	1 4 95F14VGH J2	u.o.n 65F14VGH J2
TC pitch 1 : 30.00	4 6 115F14VGH J2	
Thickness : 35	1 6 115F14VGH J2	
Spacing : 1200		
TC Restraint: 350		
BC Restraint: 2400		

Timber Group: Kempas-2
Roofing Material : Concrete tile-normal 490 Pa
Ceiling Material : 13mm P/Bd to battens 85 Pa
Overhang design assumes structural fascia.
Truss Mark <S1 > 6 Single Trusses

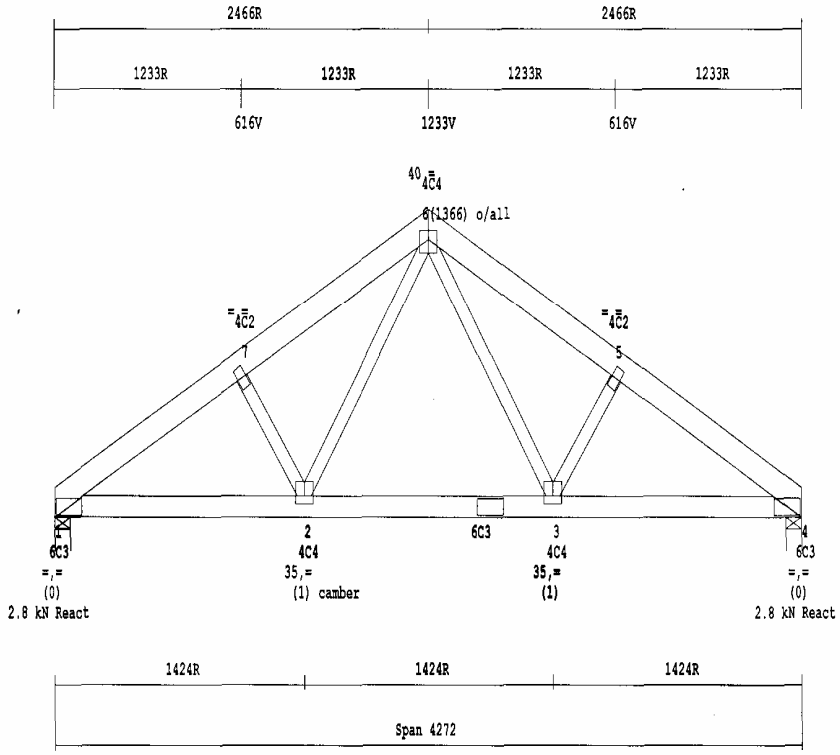

PT Multi Trussindo Perkasa 1:19pm 10 JUN 2005

Setrasari Mal blok B2-44. Bandung 40164 tel: 022-200 1421. fax:201 6715 Ver 3.4.2.0 PAGE 3

TRUSS DETAIL SHEET Job Ref: TA7

Customer: Tjeptjep Site Addr:

TRUSS DATA	**CHORDS**	**WEBS**
Truss Type : Jack	1 3 95F14VGH J2	u.o.n 65F14VGH J2
TC pitch 1 : 30.00	1 4 95F14VGH J2	
Station : 2400		
Thickness : 35		
Spacing : 1200		
TC Restraint: 350		
BC Restraint: 2400		

Timber Group: Kempas-2

Roofing Material : Concrete tile-normal 490 Pa

Ceiling Material : 13mm P/Bd to battens 85 Pa

Overhang design assumes structural fascia.

Truss Mark <J1 > 18 Single Trusses

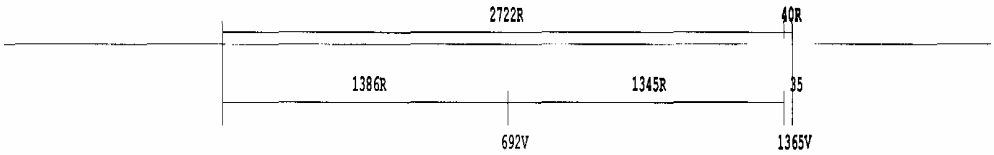

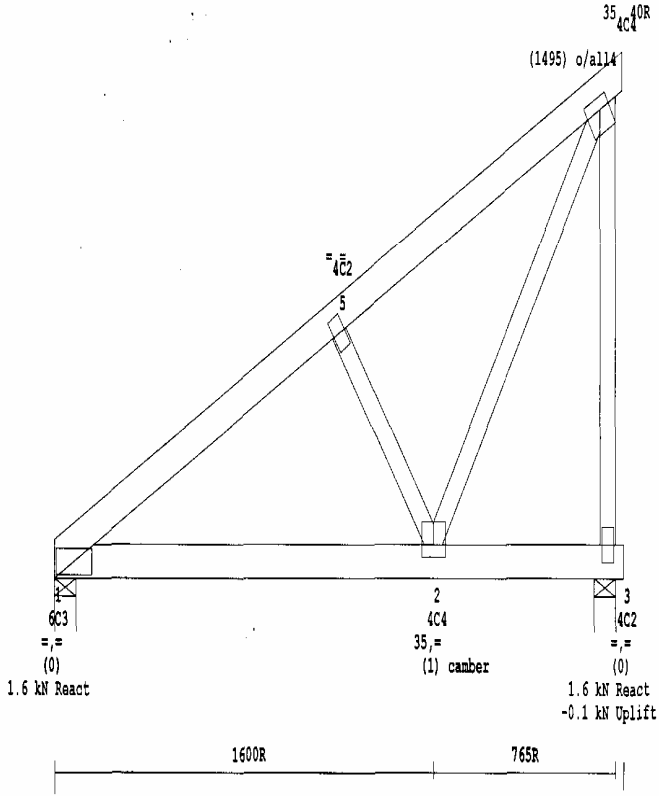

PT Multi Trussindo Perkasa 1:19pm 10 JUN 2005

Setrasari Mal blok B2-44. Bandung 40164 tel: 022-200 1421. fax:201 6715 Ver 3.4.2.0 PAGE 4

TRUSS DETAIL SHEET Job Ref: TA7

Customer: Tjeptjep Site Addr:

TRUSS DATA	**CHORDS**	**WEBS**
Truss Type : Hip	1 3 95F14VGH J2	u.o.n 65F14VGH J2
TC pitch 1 : 22.21	1 4 95F14VGH J2	
Thickness : 35		
Spacing : 1200		
TC Restraint: 350		
BC Restraint: 2400		

Timber Group: Kempas-2

Roofing Material : Concrete tile-normal 490 Pa

Ceiling Material : 13mm P/Bd to battens 85 Pa

Overhang design assumes structural fascia.

Truss Mark <H1 > 4 Single Trusses

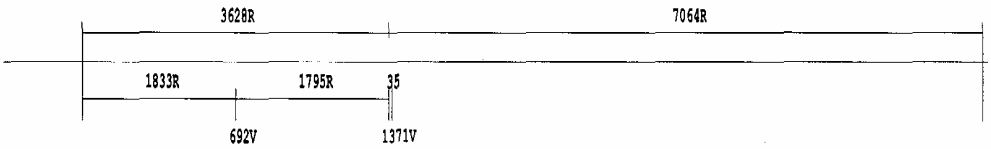

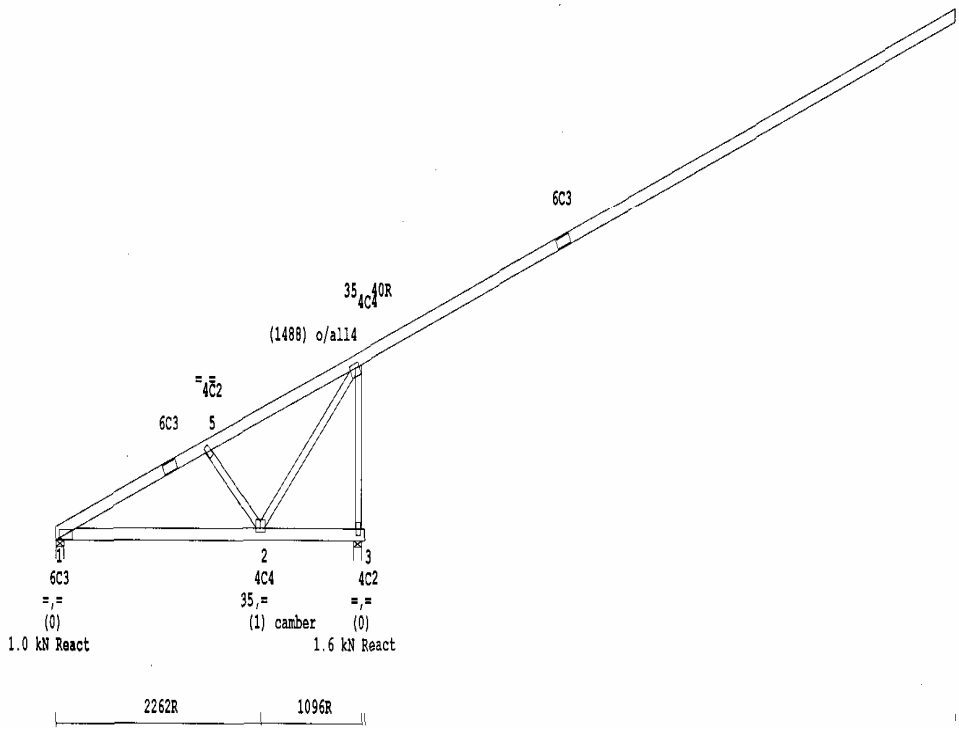

PT Multi Trussindo Perkasa 1:19pm 10 JUN 2005

Setrasari Mal blok B2-44. Bandung 40164 tel: 022-200 1421. fax:201 6715 Ver 3.4.2.0 PAGE 5

TRUSS DETAIL SHEET Job Ref: TA7

Customer: Tjeptjep Site Addr:

TRUSS DATA	**CHORDS**	**WEBS**
Truss Type : Creeper	1 2 95F14VGH J2	u.o.n 65F14VGH J2
TC pitch 1 : 30.00	1 3 95F14VGH J2	
Station : 1200		
Thickness : 35		
Spacing : 1200		
TC Restraint: 350		
BC Restraint: 2400		

Timber Group: Kempas-2

Roofing Material : Concrete tile-normal 490 Pa

Ceiling Material : 13mm P/Bd to battens 85 Pa

Overhang design assumes structural fascia.

Truss Mark <C1 > 8 Single Trusses

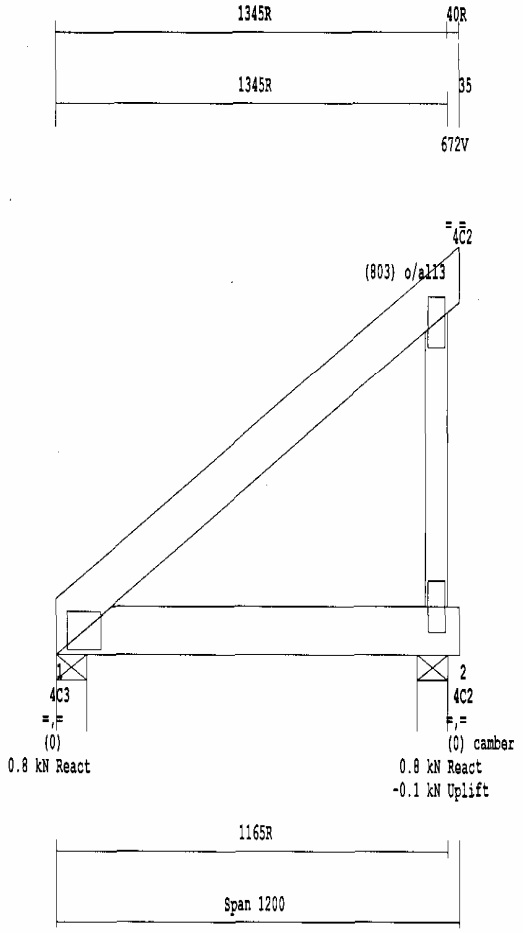

Lampiran 3

ANALISIS HARGA SATUAN PEKERJAAN
BALOK BETON TAMBAHAN

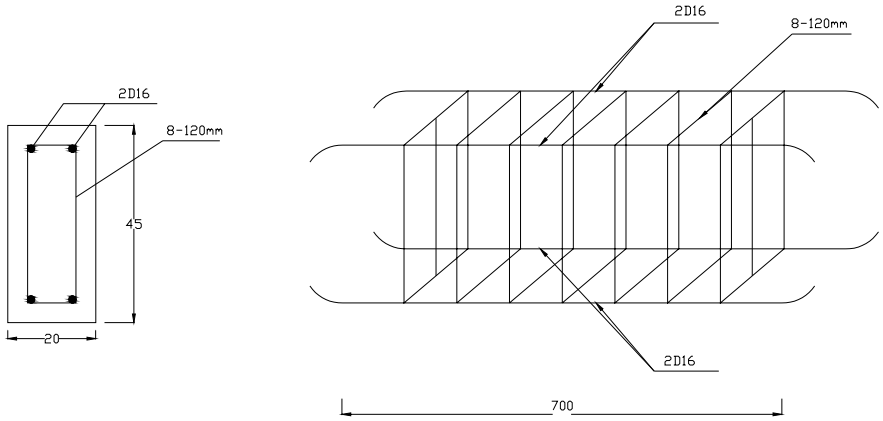

Volume Balok 45/20 = 0,45 x 0,20 x 7 = 0,63 m³

1) Pekerjaan Pembesian

* Besi D16 = (4x7m) x 1,58 Kg/m = 44,24 Kg

* Tulang sengkang 8-120mm (Selimut beton = 1/10 x h = 4,5 cm)

Panjang 1 tul. Sengkang = 2 x [(45-9) + (20-9)]

= 94 cm

= 0,94 cm

Banyaknya sengkang = (700 cm / 12 cm) = 58.33 = 59 bh

* Berat sengkang = 59 x 0,94 x 0,4 = 22,184 Kg

* Berat tulangan untuk 1m³ balok = 1/0,63 x (44,24 + 22,184)

= 105,435 Kg

Biaya bahan besi beton per m³

Besi beton = 105,435 x 1,05 x Rp. 5.789 = Rp. 640.881,-

Kawat beton = 105,435 x 0,01 x Rp. 9.250 = Rp. 9.753,-

Peralatan spencer = 105,435 x 1x Rp. 275 = Rp. 28.995,-

_____+

Total = Rp. 679.629,-

Upah pekerjaan pembesian per m³

Tukang setengah terampil = 105,435 x 0,025 x Rp.34.000 = Rp. 89.620,-

Tukang besi terampil = 105,435 x 0,015 x Rp.37.500 = Rp. 59.307,-

Kepala tukang besi beton = 105,435 x 0,01 x Rp.35.000 = Rp. 36.902,-

Mandor = 105,435 x 0.005 x Rp.36.500 = Rp. 19.242,-

_____+

Total = Rp.205.071,-

Total harga bahan dan upah pekerjaan pembesian per m³

= Rp. 679.629,- + Rp. 205.071,-

= Rp. 884.700,-

2) Pekerjaan beton

Bahan balok beton tambahan per 1m³ (cor beton site mix K 175)

Portland Cement = 6,8 zak x Rp. 34.000,- = Rp. 231.200,-

Split pecah mesin 2/3 = 0,83 x Rp. 101.903,50,- = Rp. 84.580,-

Pasir beton = 0,54 x Rp. 101.013,50,- = Rp. 54.547,-

Alat Bantu = 1 x Rp. 20.000,- = Rp. 20.000,-

_____+

Total = Rp. 390.327,-

Upah pekerjaan beton per m³

Pekerjaan	= 3 org x Rp. 23.500,-	= Rp. 70.500,-
Tukang batu setengah terampil	= 0,5 org x Rp. 30.000,-	= Rp. 15.000,-
Kepala tukang batu	= 0,05 org x Rp. 35.000,-	= Rp. 1.500,-
Mandor	= 0,01 org x Rp. 36.500,-	= Rp. 365,- +
	Total	Rp. 87.365,-

Total harga bahan dan upah pekerja beton per m³

= Rp. 390.327,- + Rp. 87.365,- = Rp. 477.692,-

3) Pekerjaan Bekisting

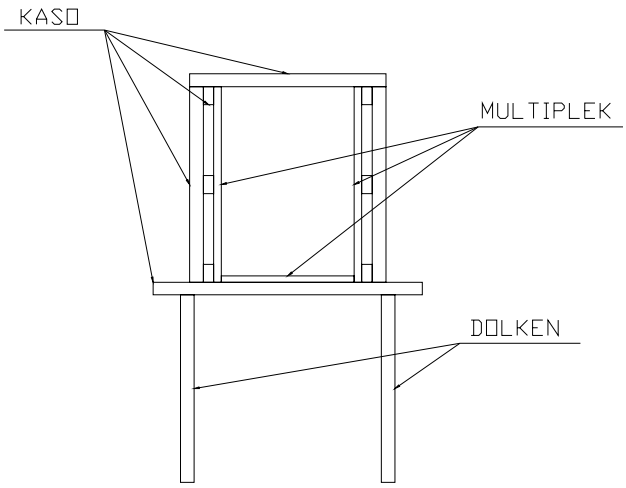

Bahan untuk bekisting

a. Multiplek t = 12 mm

Luas 1 lebar multiplek = 1,2 x 2,4 = 2,88 m²

Luas multiplek untuk bekisting 1 buah balok = (2 x 0,45 x 7) + (0,20 x 7)

= 7,7 m²

Luas multiplek untuk 1 m³ balok = 1/0,63 x 7,7 m²

= 12,222 m²

Harga multiplek untuk 1 m³ untuk balok = 12,222/ 2,88 x Rp. 124.500,-

= Rp. 528.347,-

b. Kaso 5/7

Volume kaso untuk bekisting 1 buah balok beton

= (6 x 0,05 x 0,07 x 7) + [2 x (700/50 x 0,05 x 0,07 x 0,45)] + (700/50x 0,05 x 0,07 x 0,5) + [700/50 x 0,05 x 0,07 x 0,75]

= 0,260 m³

Volume kaso bekisting 1 m³ ring balok = 1/ 0,63 x 0,260 = 0,413

Harga kaso untuk bekisting 1 m³ ring balok = 0,413 x Rp. 1.875.000

= Rp. 774.375,-

c. Dolken

Jumlah dolken untuk 1 buah balok = 2 x 700/50 = 28 batang

Jumlah dolken untuk 1 m³ balok = 1/0,63 x 28 = 44,44 = 45 batang

Harga dolken untuk 1 m³ balok = 45 x Rp. 15.000/batang

= Rp. 675.000

d. Paku

Paku = 0,4 x 12,222 x Rp 8.500, = Rp. 41.555,-

Total harga bahan pekerjaan bekisting per m^3

= Rp. 528.347,- + Rp. 774.375,- + Rp. 41.555,- + Rp. 6.75.000,-

= Rp. 2.019.277,-

Upah pekerjaan bekisting :

Pekerja	= 0,12 x 12,222 x Rp. 23.500	= Rp. 34.466,-
Tukang setengah terampil	= 0,15 x 12,222 x 31.000	= Rp. 56.833,-
Kepala tukang kayu	= 0,15 x 12,222 x Rp. 35.000	= Rp. 64.166,-
Mandor	= 0,05 x 12,222 x RP.36.500	= Rp. 22.305,-
Tukang kayu ½ terampil	= 0,12 x 12,222 x Rp. 31.000	= Rp. 45.466,-
		+
	Total	= Rp. 223.235,-

Total harga bahan dan upah pekerjaan bekisting per m^3 adalah

= Rp. 2.019.277,- + Rp. 223.235,-

= Rp. 2.242.512,-

Total harga satuan pekerjaan balok beton tambahan per m^3 :

Perkerjaan pembesian	= Rp. 884.700,-
Perkerjaan beton	= Rp. 477.692,-
Perkerjaan bekisting	= Rp. 2.242.512,-
	+
	Total Rp. 3.604.904,-

Biaya pekerjaan balok beton sepanjang 7 m :

= Volume balok beton x Rp. 3.604.904,-

= 0,63 x Rp. 3.604.904,-

= Rp. 2.271.090,-

Lampiran